CITY OF HOLTVILLE

WATER TREATMENT PLANT IMPROVEMENTS PROJECT - 2017

PROJECT DESCRIPTION

THE CITY OF HOLTVILLE HAS APPROVED FOR BIDDING OF IMPROVEMENTS TO THE WATER TREATMENT PLANT. IMPROVEMENTS INCLUDE THE FOLLOWING: INSTALL A SHADE STRUCTURE OVER THE CLARIFIER/MIX MEDIA FILTERS; REPLACEMENT OF FINISH WATER PUMP STATION MOTORS; INSTALL A BAFFLING SYSTEM IN THE 1.5 MG WATER STORAGE TANK; FINISH WATER PIPING ALIGNMENT TO ALLOW THE WATER STORAGE TANKS TO OPERATE IN SERIES; REHABILITATE THE 2.4 MG WATER STORAGE TANK WITH THE ADDITION OF A CATHODIC PROTECTION SYSTEM, TTHM SYSTEM, AND RECOAT OF THE TANK; REPLACEMENT OF TWO EMERGENCY STANDBY GENERATORS; AND ELECTRICAL AND CONTROLS FOR AUTOMATION. THE FOLLOWING ITEMS ARE THE BASIS OF THIS PROJECT:

A. CLARIFIER/MIX MEDIA FILTERS SHADE STRUCTURE
A SHADE STRUCTURE IS TO BE INSTALLED OVER THE CLARIFIER/MIX MEDIA FILTER FACILITY. THE SHADE STRUCTURE WOULD ASSIST IN REDUCING WATER EVAPORATION, AND ALGAL SPECIES AND BACTERIAL LEVELS WITHIN THE CLARIFIER/MIX MEDIA FILTER UNITS.

B. FINISHED WATER TRANSFER PUMPS
FINISH WATER TRANSFER PUMPS - MOTOR AND STARTER REPLACEMENT: THE TWO (2) EXISTING FINISH WATER PUMP MOTORS SHALL BE REMOVED AND REPLACED WITH VARIABLE SPEED MOTORS AND VARIABLE FREQUENCY DRIVES TO IMPROVE EFFICIENCY OF OPERATION.

C. BAFFLES FOR 1.5 MG WATER STORAGE TANK
A FULL DEPTH BAFFLING SYSTEM WILL BE INSTALLED IN THE 1.5 MG FINISHED WATER RESERVOIR TO PROVIDE SERPENTINE PLUG FLOW THROUGH THE TANK TO ACHIEVE IMPROVED CT PERFORMANCE. THE INSTALLATION WILL REQUIRE SUSPENDING THE BAFFLES FROM PIPES ATTACHED TO THE TANK ROOF AND WELDED CONNECTIONS TO THE STEEL FLOOR AND WALLS OF THE TANK TO STABILIZE THE BAFFLES. THE INSTALLATION WILL COMPROMISE THE EXISTING COATING SYSTEM. RATHER THAN DO A PROBLEMATIC PATCH REPAIR JOB ON THE COATING, THE ENTIRE TANK INTERIOR WILL BE CLEANED AND RECOATED TO PROVIDE A DURABLE INSTALLATION.

D. FINISH WATER PIPING
THE CITY OF HOLTVILLE CURRENTLY USES THE EXISTING 12-INCH DIAMETER BACKWASH WATER PIPELINES TO OPERATE THE EXISTING 1.5 MG AND 2.4 MG STEEL RESERVOIR WATER TANKS IN SERIES. THE FINISH WATER PIPING ALIGNMENT WILL PROVIDE THE EXISTING 1.5 MG AND 2.4 MG STEEL RESERVOIR WATER TANKS TO OPERATE IN SERIES WITH EACH TANKS FINISH WATER OUTLET BEING ON THE OPPOSITE SIDE OF THE TANK.

E. CATHODIC PROTECTION SYSTEM FOR 2.4 MG TANK
A CATHODIC PROTECTION SYSTEM IS TO BE INSTALLED IN THE 2.4 MG TANK TO PROTECT THE STEEL FROM FUTURE COATING FAILURES.

F. IN-RESERVOIR TRIHALOMETHANE REMOVAL SYSTEM FOR 2.4 MG TANK
AN IN-RESERVOIR TRIHALOMETHANE (THM) REMOVAL SYSTEM IS TO BE INSTALLED FOR THE 2.4 MG TANK IN ORDER TO REDUCE THE THM WITHIN THE POTABLE WATER SYSTEM. THE THM REMOVAL SYSTEM WILL INCLUDE A TANK MIXING SYSTEM, A SPRAY SYSTEM TO STRIP OUT THE VOLATILE THM CHEMICALS, AND VENTILATION SYSTEM TO REMOVE THE STRIPPED CHEMICALS.

G. REHABILITATION OF THE 2.4 MG WATER STORAGE TANK
THE COATING SYSTEM IS CURRENTLY IN VERY POOR CONDITION DUE TO THE CHLORINE LEVELS APPLIED OVER A PERIOD OF TIME IN AN ATTEMPT TO ADDRESS THE TTHM VIOLATIONS. LARGE SECTIONS OF THE COATING SYSTEM HAVE PEELED FROM THE STEEL SUBSTRATE, AND MINOR CORROSION IS EVIDENT WHERE THE SUBSTRATE IS EXPOSED TO WATER.

THE CONTRACTOR SHALL REHABILITATE THE EXISTING 2.4 MG WATER STORAGE TANK. THE REHABILITATION OF THE 2.4 MG WATER STORAGE TANK SHALL CONSIST OF REMOVING AND DISPOSING THE EXISTING EPOXY COATING ON THE INTERIOR TANK SIDE WALL, INTERIOR TANK BOTTOM, AND OTHER INTERIOR COATED TANK APPURTENANCES. THE REMOVAL, DISPOSAL OF, AND REPLACEMENT SHALL BE REQUIRED OF THE INTERIOR TANK LADDER, VENT SCREENS, ROOF CLIP SHOE SUPPORTS AND HATCH GASKETS. RENOVATION SHOULD INCLUDE AN ABRASIVE BLASTING TO COATED INTERIOR, TESTING AND DISPOSAL OF BLASTING WASTE MATERIAL AND COATING OF THE INTERIOR TANK WALL, BOTTOM, AND OTHER INTERIOR COATED TANK APPURTENANCES.

H. WATER TREATMENT PLANT EMERGENCY STANDBY GENERATOR
THE CITY OF HOLTVILLE IS EQUIPPED WITH EMERGENCY STANDBY POWER AT THE WATER TREATMENT PLANT AND AT THE RAW WATER PONDS SITE. EMERGENCY STANDBY POWER IS PROVIDED BY MEANS OF STATIONARY DIESEL GENERATORS. THE STANDBY GENERATOR AT THE WATER TREATMENT PLANT AND RAW WATER PONDS SITE ARE IN NEED OF REPLACEMENT. THE CONTRACTOR SHALL REMOVE AND REPLACE THE EXISTING DIESEL EMERGENCY GENERATORS WITH NEW DIESEL EMERGENCY GENERATORS.

I. WATER PLANT ELECTRICAL IMPROVEMENTS
THE EXISTING ELECTRICAL SYSTEM WAS CONSTRUCTED IN 1991 AND IS SIGNIFICANTLY OUTDATED. THE IMPROVED CONTROLS SYSTEM IS TO BE COMPRISED OF A NEW MASTER PLC CABINET IN CONJUNCTION WITH AN ASSOCIATED REMOTE I/O CABINET AND PC BASED HMI SYSTEM. IN CONJUNCTION, THE CONTRACTOR SHALL BE RESPONSIBLE FOR PROVIDING AND INSTALLING VARIOUS INSTRUMENTS AND DEVICES THROUGHOUT THE CONTROLS SYSTEM AS DENOTED ON THE P&ID'S OF THE ELECTRICAL AND INSTRUMENTATION PLANS AND SPECIFICATIONS. THE CONTRACTOR SHALL BE RESPONSIBLE FOR ALL SYSTEM PROGRAMMING, CONFIGURATION, TESTING AND COMMISSIONING AS DEFINED IN ELECTRICAL AND INSTRUMENTATION PLANS AND SPECIFICATIONS.

GENERAL NOTES

EXAMINATION OF SITE
IT IS THE RESPONSIBILITY OF THE CONTRACTOR AND SUBCONTRACTOR(S) TO EXAMINE THE PROJECT SITE PRIOR TO THE OPENING OF PROPOSALS. THE CONTRACTOR SHALL BECOME FAMILIAR AS TO THE CONDITIONS UNDER WHICH THE WORK IS TO BE PERFORMED. IT IS EXPECTED THAT QUESTIONS OR CLARIFICATIONS RELEVANT TO THE PROJECT'S SCOPE OF WORK WILL BE PRESENTED TO THE OWNER PRIOR TO THE OPENING OF PROPOSALS. NO ALLOWANCE WILL BE PROVIDED TO THE CONTRACTOR FOR NEGLECT TO PROPERLY EXAMINE THE PROJECT SITE.

UTILITIES
THE LOCATION OF UNDERGROUND UTILITIES AND PIPELINES AS ILLUSTRATED ON THE PLANS IS APPROXIMATE. THE CONTRACTOR SHALL DETERMINE THE EXACT LOCATION OF ALL EXISTING POTENTIALLY CONFLICTING UNDERGROUND UTILITIES AND PIPELINES (BY COMPLETING EXCAVATIONS) WITHIN FIVE (5) DAYS AFTER THE ISSUANCE OF THE NOTICE TO PROCEED. THE CONTRACTOR SHALL COMPLETE ALL EXCAVATIONS AND DETERMINE THE TOP OF PIPE, BOTTOM OF PIPE AND ALL OTHER PERTINENT INFORMATION RELATIVE TO EXISTING UNDERGROUND FACILITIES. THE CONTRACTOR SHALL VERIFY THE MATERIAL COMPOSITION AND OUTSIDE DIAMETER OF THE PIPELINES. THE EXACT HORIZONTAL LOCATIONS OF THE UNDERGROUND UTILITIES SHALL BE DETERMINED. ANY INFORMATION WHICH DEVIATES FROM THE BID SET PLANS SHALL BE NOTED ON THE AS-BUILT PLANS.

THE CONTRACTOR SHALL ASSUME COMPLETE RESPONSIBILITY FOR DAMAGED UTILITIES. A LIST OF UTILITY COMPANIES WHICH SERVICE THE CITY OF HOLTVILLE APPEARS BELOW:

CITY OF HOLTVILLE
121 W. FIFTH STREET
HOLTVILLE, CA 92250
TEL: (760) 356-2632
FAX: (760) 356-1863
CONTACT:
ALEX CHAVEZ
FRANK CORNEJO

AT&T CALIFORNIA
1029 S. SECOND STREET
EL CENTRO, CA 92243
TEL: (760) 337-3327
FAX: (760) 353-7461
CONTACT:
CARLOS SOTO

IMPERIAL IRRIGATION DISTRICT
POWER DIVISION
1699 W. MAIN STREET, SUITE A
EL CENTRO, CA 92243
TEL: (760) 482-3408
FAX: (760) 482-3401
CONTACT: ALFRED ORNELAS

IMPERIAL IRRIGATION DISTRICT
WATER DIVISION
333 E. BARIONI BOULEVARD
IMPERIAL, CA 92251
TEL: (760) 339-9507
FAX: (760) 339-9016
CONTACT: FRANK FIORENZA

SOUTHERN CALIFORNIA GAS COMPANY
PLANNING DEPARTMENT
1981 W. LUGONIA AVENUE
REDLANDS, CA 92373
TEL: (909) 335-7755
CONTACT: MICHAEL JACOB

SOUTHERN CALIFORNIA GAS COMPANY
602 E. ROSS AVENUE
EL CENTRO, CA 92243
TEL: (909) 335-7850
CONTACT: DAVID MORENO

GENERAL NOTES

CITY COUNCIL

RICHARD LAYTON	COUNCIL MEMBER
MIKE GOODSELL	MAYOR PRO TEM
MIKE PACHECO	COUNCIL MEMBER
JIM PREDMORE	MAYOR
GINGER WARD	COUNCIL MEMBER

CITY STAFF

NICK WELLS	CITY MANAGER
KARIZA PRECIADO	CITY CLERK/FINANCE MANAGER
GEORGE MORRIS	CITY TREASURER
ALEX CHAVEZ	PUBLIC WORKS SUPERVISOR
FRANK CORNEJO	WATERWORKS & WW SUPERVISOR
ALEX SILVA	FIRE CHIEF
STEVE WALKER	CITY ATTORNEY

APPROVED FOR THE CITY OF HOLTVILLE

FRANK CORNEJO
WATERWORKS AND WASTEWATER SUPERVISOR

DATE

VICINITY MAP

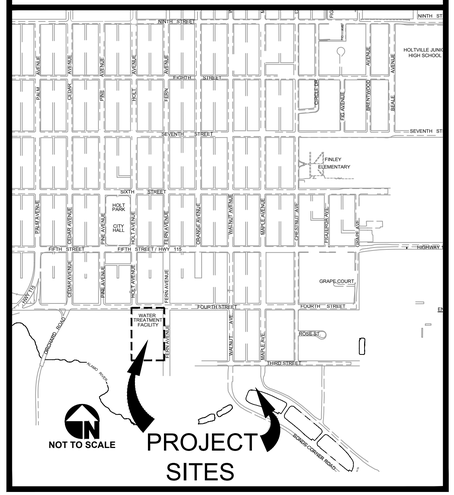

LOCATION MAP

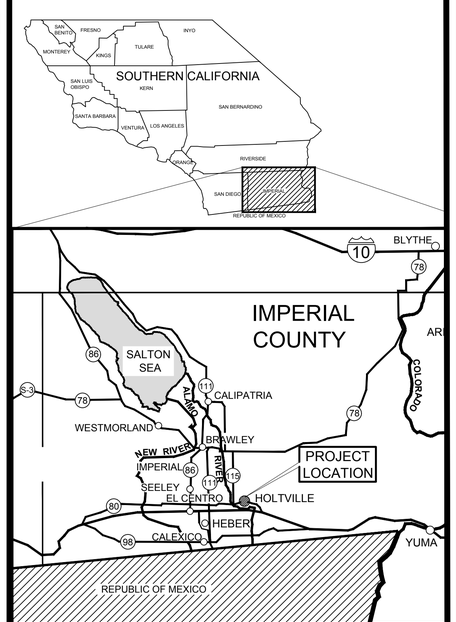

SHEET INDEX

1. TITLE SHEET
2. PROJECT NOTES AND DESIGN CRITERIA
3. PROCESS FLOW DIAGRAM
4. SITE PLAN
5. CLARIFIER FILTER SHADE STRUCTURES PLAN, SECTIONS AND DETAILS
6. FINISH WATER TRANSFER PUMP MOTOR REPLACEMENT PLAN
7. 1.5 MG WATER TANK BAFFLE PLAN, SECTION AND DETAILS
8. 2.4 MG WATER TANK PIPING AND APPURTENANCES PLAN
9. 2.4 MG TANK DETAILS - 1
10. 2.4 MG TANK DETAILS - 2
11. 2.4 MG TANK DETAILS - 3
12. FINISH WATER PIPING PLAN AND SECTIONS
13. FINISH WATER PIPING DETAILS
14. EMERGENCY GENERATOR SITE AND DEMOLITION PLAN
15. WTP EMERGENCY GENERATOR
16. RAW WATER PONDS EMERGENCY GENERATOR
17. FENCING DETAILS
18. ELECTRICAL NOTES, SYMBOLS, AND LEGENDS (E001)
19. WATER TREATMENT PLANT SINGLE LINE DIAGRAM (E002)
20. RAW WATER PUMP STATION/POND SINGLE LINE DIAGRAM (E003)
21. ELECTRICAL SCHEDULES (E004)
22. OVERALL SITE PLAN (E005)
23. CLARIFIER/FILTER AREA PLAN (E006)
24. OPERATIONS BUILDING PLAN (E007)
25. RAW WATER PUMP STATION ELECTRICAL PLAN (E008)
26. FINISHED WATER PUMP SCHEMATIC/CONNECTION DIAGRAM (E009)
27. VACUUM PUMPS & CALCIUM HYPOCHLORITE METERING PUMP SCHEMATIC/CONNECTION DIAGRAMS (E010)
28. GENERATOR SCHEMATIC/CONNECTION DIAGRAM (E011)
29. VALVE CONTROL CABINET SCHEMATIC DIAGRAM - SHEET 1 (E012)
30. VALVE CONTROL CABINET SCHEMATIC DIAGRAM - SHEET 2 (E013)
31. MISCELLANEOUS CONNECTION DIAGRAM - SHEET 1 (E014)
32. MISCELLANEOUS CONNECTION DIAGRAM - SHEET 2 (E015)
33. MISCELLANEOUS CONNECTION DIAGRAM - SHEET 3 (E016)
34. PLC & WIO CABINET POWER DISTRIBUTION SCHEMATIC DIAGRAMS (E017)
35. RIO CABINET SCHEMATIC DIAGRAM (E018)
36. CONDUIT BLOCK DIAGRAM - SHEET 1 (E019)
37. CONDUIT BLOCK DIAGRAM - SHEET 2 (E20)
38. SYSTEM NETWORK COMMUNICATIONS DIAGRAM (E021)
39. ELECTRICAL DETAILS (E022)
40. P&ID SYMBOLS AND LEGEND (I001)
41. P&ID - SHEET 1 (I002)
42. P&ID - SHEET 2 (I003)
43. P&ID - SHEET 3 (I004)
44. P&ID - SHEET 4 (I005)
45. P&ID - SHEET 5 (I006)
46. P&ID - SHEET 6 (I007)

The Holt Group
ENGINEERING * PLANNING * CONSTRUCTION MANAGEMENT * SURVEYING
EL CENTRO OFFICE
1501 N. Imperial Ave.
El Centro, CA 92243
(760) 337-3883
BLYTHE OFFICE
201 E. Hobsonway
Blythe, CA 92225
(760) 922-4658

PREPARED UNDER THE DIRECT SUPERVISION OF:
JESUS R. MARMOLEJO, P.E.
80410
R.C.E. No.
09/11/2020
DATE
03/31/2021
REG. EXP.

REGISTERED PROFESSIONAL ENGINEER
JESUS R. MARMOLEJO
No. 80410
Exp. 03-31-21
CIVIL
STATE OF CALIFORNIA

PROJECT TITLE: CITY OF HOLTVILLE - WATER TREATMENT PLANT IMPROVEMENT PROJECT - 2017
PROJECT NUMBER: 116.455E
SHEET CONTENT: TITLE SHEET

DESIGNED BY: JL/JM
DRAWN BY: JS/DB
CHECKED. BY: JGH

SHEET No. 1 OF 46 SHEETS

DESIGN CRITERIA FOR FACILITIES

I.	GENERAL	
A.	CURRENT DOMESTIC DEMAND	1.0 TO 1.5 MGD
B.	CURRENT FIRE FLOW DEMAND	2,500 GPM FOR 4 HOURS @ 20 P.S.I.
C.	CAPACITY OF WATER TREATMENT PLANT	2 MGD
II.	RAW WATER BASINS (EXISTING)	
A.	CAPACITY OF BASIN NO. 1	3.8 MG
B.	CAPACITY OF BASIN NO. 2	3.8 MG
C.	CAPACITY OF BASIN NO. 3	3.8 MG
D.	TOTAL CAPACITY OF BASINS	11.4 MG
III.	RAW WATER PUMP STATION (EXISTING)	
A.	WET WELL	P.C.C. 8' X 8' X 10' DEEP
B.	NUMBER OF PUMPS	2 EACH
C.	TYPE OF PUMP	SINGLE STAGE VERTICAL TURBINE
D.	CAPACITY OF EACH PUMP	2,100 GPM (3 MGD)
E.	TDH OF EACH PUMP	40 FEET
F.	CONTROL	CONSTANT SPEED
IV.	CLARIFIER / FILTER UNITS TREATMENT SYSTEM (EXISTING)	
A.	NUMBER OF CLARIFIER UNITS	2 EXISTING
B.	NUMBER OF FILTER UNITS	4 EXISTING
C.	CAPACITY OF EACH CLARIFIER UNIT	2,160 GPM (1.5 MGD)
D.	CAPACITY OF EACH FILTER UNIT	1,500 GPM (1.05 MGD)
E.	TOTAL CAPACITY OF CLARIFIER / FILTER UNITS	1,400 GPM (2 MGD) STAND BY
V.	FINISH WATER TRANSFER PUMP STATION	
A.	WET WELL	.
B.	NUMBER OF PUMPS	.
C.	TYPE OF PUMP	.
D.	CAPACITY OF EACH PUMP	.
E.	TDH OF EACH PUMP	.
F.	CONTROL	.
VI.	FINISH WATER RESERVOIRS (EXISTING)	
	A. 1.5 MG TANKS	
	1. PURPOSE	CHLORINE CONTACT TIME
	2. TYPE	ABOVE GROUND STEEL TANK
	3. DIAMETER	100' - 0" INSIDE DIAMETER
	4. HEIGHT	34' - 1"
	5. NOMINAL CAPACITY	1.5 MG
	6. OPERATING CAPACITY	1.3 TO 1.4 MG
	7. BAFFLE SYSTEM	YES, NEW
	8. CATHODIC PROTECTION	YES
	B. 2.4 MG TANKS	
	PURPOSE	WATER STORAGE/TTHM STRIPPING
	TYPE	ABOVE GROUND STEEL TANK
	DIAMETER	128' - 0" INSIDE DIAMETER
	HEIGHT	34' - 0"
	NOMINAL CAPACITY	2.4 MG
	OPERATING CAPACITY	2.2 TO 2.3 MG
	7. BAFFLE SYSTEM	NO
	8. CATHODIC PROTECTION	YES, NEW
VII.	DISTRIBUTION PUMP STATION (EXISTING)	
	A. NUMBER OF PUMPS	4 EACH
	B. CAPACITY OF EACH PUMP	2,000 GPM
	C. TDH OF EACH PUMP	180 FEET
	D. TYPE OF PUMP	VERTICAL CENTRIFUGAL
	E. CONTROL	VARIABLE FREQUENCY DRIVE
	F. BACK UP PUMP	1 EACH (700 GPM)
VIII.	SLUDGE DECANT PUMP STATION	
	A. NUMBER OF PUMPS	1 EACH
	B. CAPACITY OF EACH PUMP	40 GPM
	C. TDH OF EACH PUMP	20 FEET
	D. TYPE OF PUMP	SUBMERSIBLE
	E. CONTROL	HIGH AND LOW FLOATS
IX.	TTHM REMOVAL SYSTEM	
	A. SCOPE OF WORK	CONSTRUCTION OF MIXING SPRAY AERATION AND FORCE VENTILATION SYSTEM
	B. TREATMENT CAPACITY	4 MG
XI.	UV DISINFECTION SYSTEM	
A.	PEAK DESIGN FLOW	2,240 GPM
B.	AVERAGE FLOW	1,400 GPM
C.	DESIGN UVT	90% (AT 254 NM, 1 CM PATH LENGTH)
D.	WATER TEMPERATURE	34°F TO 86°F
E.	TURBIDITY	<5 NTU
F.	LOG INACTIVATION	3 LOG CRYPTOSPORIDIUM/GIARDIA
XII.	FLOW METER	
A.	INFLUENT FLOW METER	PROPELLER METER
	1. SIZE	12-INCH DIAMETER
	2. FLOW RATE	200 TO 3,000 GPM
B.	UV FLOW METER	ELECTROMAGNETIC
	1. SIZE	12-INCH DIAMETER
	2. FLOW RATE	333 - 11,000 GPM
C.	1.5 MG TANK FLOW METER	ELECTROMAGNETIC
	1. SIZE	18-INCH DIAMETER
	2. FLOW RATE	667 TO 22,000 GPM
D.	1.5 MG TANK FLOW METER	ELECTROMAGNETIC
	1. SIZE	18-INCH DIAMETER
	2. FLOW RATE	667 TO 22,000 GPM
D.	DISTRIBUTION FLOW METER	ELECTROMAGNETIC
	1. SIZE	16-INCH DIAMETER
	2. FLOW RATE	545 TO 18,,000 GPM

X. CHEMICAL SYSTEMS

A. PRE-CLARIFIER CHLORINATION
1. LOCATION: RAW WATER INFLUENT UPSTREAM OF THE CLARIFIER. .
2. DOSAGE - AVG./MAX. .
3. USE - AVG./MAX. .
4. STORAGE TANK CAPACITY. .
5. FEED PUMPS .
6. PUMP CAPACITY (MIN./MAX.) .

B. PRE-CLARIFIER ALUMINUM SULFATE
1. LOCATION: RAW WATER INFLUENT UPSTREAM OF THE CLARIFIER. .
2. DOSAGE - AVG./MAX. .
3. USE - AVG./MAX. .
4. STORAGE TANK CAPACITY. .
5. FEED PUMPS .
6. PUMP CAPACITY (MIN./MAX.) .

C. PRE-FILTER CHLORINATION
1. LOCATION: RAW WATER INFLUENT UPSTREAM OF THE CLARIFIER. .
2. DOSAGE - AVG./MAX. .
3. USE - AVG./MAX. .
4. STORAGE TANK CAPACITY. .
5. FEED PUMPS .
6. PUMP CAPACITY (MIN./MAX.) .

D. PRE-STORAGE TANK CHLORINATION
1. LOCATION: RAW WATER INFLUENT UPSTREAM OF THE CLARIFIER. .
2. DOSAGE - AVG./MAX. .
3. USE - AVG./MAX. .
4. STORAGE TANK CAPACITY. .
5. FEED PUMPS .
6. PUMP CAPACITY (MIN./MAX.) .

E. PRE-DISTRIBUTION CHLORINATION
1. LOCATION: RAW WATER INFLUENT UPSTREAM OF THE CLARIFIER. .
2. DOSAGE - AVG./MAX. .
3. USE - AVG./MAX. .
4. STORAGE TANK CAPACITY. .
5. FEED PUMPS .
6. PUMP CAPACITY (MIN./MAX.) .

F. SUPPLEMENT FILTER CHLORINATION
1. LOCATION: RAW WATER INFLUENT UPSTREAM OF THE CLARIFIER. .
2. DOSAGE - AVG./MAX. .
3. USE - AVG./MAX. .
4. STORAGE TANK CAPACITY. .
5. FEED PUMPS .
6. PUMP CAPACITY (MIN./MAX.) .

ABBREVIATIONS

%	PERCENT
AASHTO	AMERICAN ASSOCIATION OF STATE HIGHWAY AND TRANSPORTATION OFFICIALS
A.C.	ASPHALT CONCRETE
A.C.P.	ASBESTOS CEMENT PIPE
AC-FT	ACER FEET
AGG.	AGGREGATE
AGS	APPARENT OPENING SIZE
APCD	AIR POLLUTION CONTROL DISTRICT
APP	APPROXIMATE
ASTM	AMERICAN SOCIETY FOR TESTING AND MATERIALS
AVE	AVERAGE
AWWA	AMERICAN WATER WORKS ASSOCIATION
BC	BEGINNING OF CURVE
BLDG.	BUILDING
BM	BENCHMARK
BTM	BOTTOM
B.V.	BUTTERFLY VALVE
C2B	CLASS 2 BASE
CC	CUBIC CENTIMETER
C.I.	CAST IRON
CIRC	CIRCUMFERENTIAL
℄	CENTERLINE
CLR	CLEARANCE
C.M.C.	CEMENT MORTAR COATED
C.M.L.	CEMENT MORTAR LINED
CPP	CONTROL POWER PANEL
CPVC	CHLORINATED POLYVINYL CHLORIDE
DDW	DIVISION OF DRINKING WATER
D.I.	DUCTILE IRON
DIA	DIAMETER
DWG	DRAWING
D/W	DRIVEWAY
Δ	DELTA
EC	END OF CURVE
EF	EACH FACE
EL.	ELEVATION
E.P.	EDGE OF PAVEMENT
EPDM	ETHYLENE PROPYLENE DIENE M-CLASS
EW	EACH WAY
FF	FINISH FLOOR ELEVATION
FG	FINISHED GRADE
FIG	FIGURE
℄	FLOWLINE
FL.	FLANGED
F.M.	FLOW METER
FM	FORCE MAIN
FS	FINISH SURFACE
GALV	GALVANIZED
GEN	GENERATOR
GFCI	GROUND FAULT CIRCUIT INTERRUPTOR
GPH	GALLONS PER HOUR
GPM	GALLONS PER MINUTE
GRS	GALVANIZED RIGID STEEL
GW	GROUND WATER
H.B.	HOSE BIB
HDG	HOT DIPPED GALVANIZED
HDPE	HIGH DENSITY POLYETHYLENE
HP	HORSEPOWER
HW	HIGH WATER
I.D.	INSIDE DIAMETER
I.I.D.	IMPERIAL IRRIGATION DISTRICT
INV. EL.	INVERT ELEVATION
INV.	INVERT
IPS	IRON PIPE SIZE
L.	LENGTH
LBS	POUNDS
MAX.	MAXIMUM
MG	MILLION GALLON
MGD	MILLION GALLONS PER DAY
M.H.	MANHOLE
MIN.	MINIMUM
MISC.	MISCELLANEOUS
M.J.	MECHANICAL JOINT
MPH	MILES PER HOUR
No.	NUMBER
N.RIM	NORTH RIM
N.S.	NATIVE SURFACE
N.T.S.	NOT TO SCALE
O.C.	ON CENTER
O.D.	OUTSIDE DIAMETER
OHC	OVERHEAD CABLE
OHE	OVERHEAD ELECTRICAL LINE
OHT	OVERHEAD TELEPHONE LINE
OS&Y	OUTSIDE STEM AND YORK
P.C.C.	PORTLAND CONCRETE CEMENT
P.D.	PLAIN END
⅊	PROPERTY LINE
P.P.	POWER POLE
PP#	POWER POLE NUMBER
PPM	PARTS PER MILLION
PSI	POUNDS PER SQUARE INCH
PT	PRESSURE TRANSMITTER
PVC	POLYVINYL CHLORIDE
P/S	PRESTRESSING
R	RADIUS
R.C.	REINFORCED CONCRETE
ROW	RIGHT-OF-WAY
S.	SLOPE
SCH	SCHEDULE
SCHED	SCHEDULE
SD	STORM DRAIN
SDFM	STORM DRAIN FORCE MAIN
SDR	STANDARD DIMENSION RATIO
SM	STATIC MIXER
SQ	SQUARE
SS	STAINLESS STEEL OR SANITARY SEWER
STA	STATION
S/W	SIDEWALK
SWPPP	STORMWATER POLLUTION PREVENTION PLAN
TBD	TO BE DETERMINED
TBM	TEMPORARY BENCHMARK
T.C.	TOP OF CURB OR TOP OF CONCRETE
TDH	TOTAL DYNAMIC HEAD
TF	TOP OF FOOTING
THM	TRIHALOMETHANE
TMH	TOP OF MANHOLE
TOE	TOE OF SLOPE
TOF	TOP OF FLOOR
TOW	TOP OF WALL
T.P.	TOP OF PAVEMENT
TTHM	TOTAL TRIHALOMETHANE
TV	TELEVISION
TYP.	TYPICAL
UE	UNDERGROUND ELECTRICITY
UPS	UNINTERRUPTIBLE POWER SYSTEM
UNO	UNLESS NOTED OTHERWISE
UT	UNDERGROUND TELEPHONE
VERT	VERTICAL
W	WATER

DIGALERT
Dig Safely
DIAL TOLL FREE
811
AT LEAST TWO DAYS BEFORE YOU DIG
UNDERGROUND SERVICE ALERT OF SOUTHERN CALIFORNIA

LINES AND SYMBOLS LEGEND

ITEM NO.	ITEM	DESCRIPTION
1		EXISTING POWER POLE
2	OHE	EXISTING OVERHEAD ELECTRICITY
3	OHT/OHC	EXISTING OVERHEAD TELEPHONE OR CABLE
4	OHT	EXISTING OVERHEAD TELEPHONE
5	(UT)	EXISTING UNDERGROUND TELEPHONE LINE
6	(UE)	EXISTING UNDERGROUND ELECTRICAL LINE
7		EXISTING GUY WIRE
8		EXISTING ELECTRICAL VAULT
9	(8" SS)	EXISTING SANITARY SEWER PIPELINE
10	SS	EXISTING SANITARY SEWER CLEAN OUT
11	MH	EXISTING MANHOLE
12		EXISTING A.C. PAVEMENT
13		EXISTING BENCHMARK
14		SIGN AND/OR SIGN POST
15		EXISTING FENCE
16		EXISTING UNDERGROUND WATER PIPELINE EXACT LOCATION UNKOWN
17		EXISTING WATER VALVE
18	P	EXISTING PIEZOMETER
19	PL	PROPERTY LINE
20		EXISTING FIRE HYDRANT
21		STREET / PARKING LIGHT
22		EXISTING P.C.C. INFRASTRUCTURE
23		EXISTING BUILDING
24		EXISTING SHADE STRUCTURE

SECTION & DETAIL IDENTIFICATION

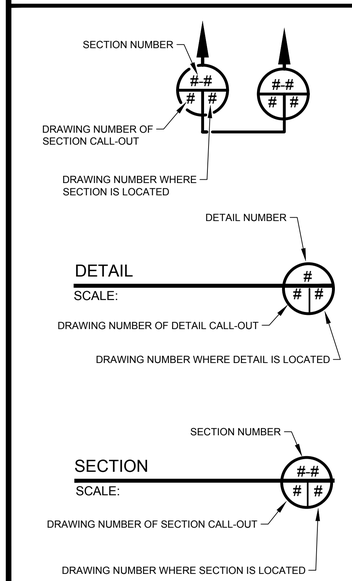

No.	REVISION	APPROVED	DATE

UNAUTHORIZED CHANGES AND USES: The engineer preparing these plans will not be responsible for, or liable for, unauthorized changes to or uses of these plans. All changes to these plans must be in writing and must be approved by the preparer of these plans.

DESIGNED BY: JL/JM | DRAWN BY: DB/JS
SCALE: | CHECKED BY: JM
BENCH MARK No. 2 | ELEV.: 986.02

MARKED "X" AT NORTHWEST CORNER OF POWER SERVICE TRANSFORMER SET PCC PAD LOCATED NEAR NORTHEAST CORNER OF EXISTING OPERATIONS BUILDING
ELEVATION = 986.02

PREPARED UNDER THE DIRECT SUPERVISION OF:

JESUS R. MARMOLEJO, P.E. — 80410 R.C.E. No.
09/11/2020 DATE — 03/31/2021 REG. EXP.

REGISTERED PROFESSIONAL ENGINEER JESUS R. MARMOLEJO No. 80410 Exp. 03-31-21 CIVIL STATE OF CALIFORNIA

The Holt Group, Inc.
ENGINEERING * SURVEYING * CONSTRUCTION MANAGEMENT * PLANNING
1601 N. IMPERIAL AVE. EL CENTRO, CA 92243 PHONE: (760) 337-3883 FAX: (760) 337-5997
201 E. HOBSONWAY BLYTHE, CA 92225 PHONE: (760) 922-4658 FAX: (760) 922-4660

PROJECT TITLE : CITY OF HOLTVILLE - WATER TREATMENT PLANT IMPROVEMENT PROJECT - 2017
PROJECT NUMBER : 116.455E
SHEET CONTENT : PROJECT NOTES AND CRITERIA

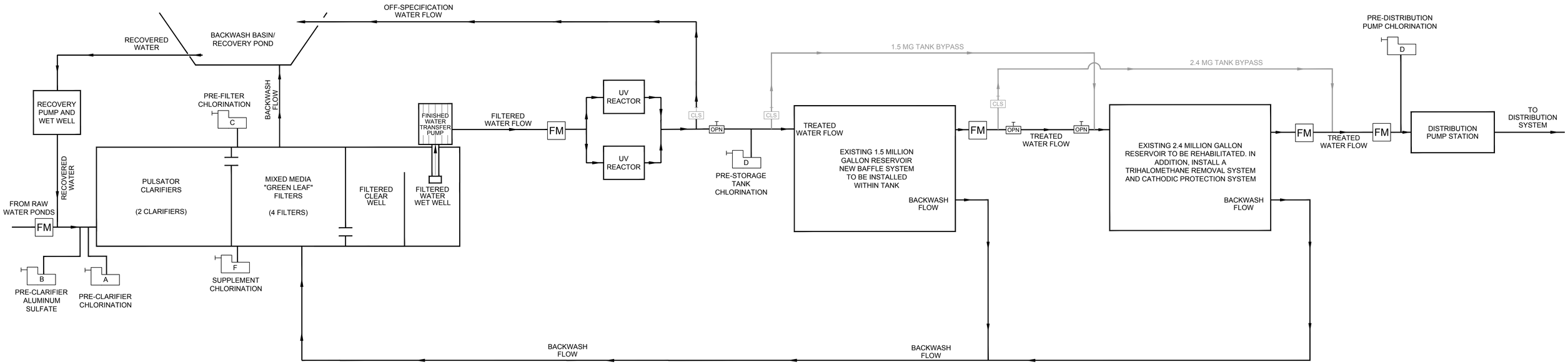

PROCESS FLOW LEGEND

SYMBOL	DESCRIPTION
OPN	WATER VALVE - NORMALLY OPEN
CLS	WATER VALVE - NORMALLY CLOSED
	CHEMICAL METER PUMP
FM	FLOW METER
	FLOW DIRECTION
	PIPE LINE
	TURBINE PUMP
	CENTRIFUGAL PUMP

No.	REVISION	APPROVED	DATE

UNAUTHORIZED CHANGES AND USES: The engineer preparing these plans will not be responsible for, or liable for, unauthorized changes to or uses of these plans. All changes to these plans must be in writing and must be approved by the preparer of these plans.

DESIGNED BY: JL/JM | DRAWN BY: DB/JS
SCALE: | CHECKED BY: JM
BENCH MARK No. 2 | ELEV.: 986.02
MARKED "X" AT NORTHWEST CORNER OF POWER SERVICE TRANSFORMER SET PCC PAD LOCATED NEAR NORTHEAST CORNER OF EXISTING OPERATIONS BUILDING
ELEVATION = 986.02

PREPARED UNDER THE DIRECT SUPERVISION OF:

JESUS R. MARMOLEJO, P.E.
80410
R.C.E. No.
09/11/2020
DATE
03/31/2021
REG. EXP.

REGISTERED PROFESSIONAL ENGINEER JESUS R. MARMOLEJO No. 80410 Exp. 03-31-21 CIVIL STATE OF CALIFORNIA

The Holt Group, Inc.
ENGINEERING * SURVEYING * CONSTRUCTION MANAGEMENT * PLANNING
1601 N. IMPERIAL AVE. EL CENTRO, CA 92243 PHONE : (760) 337-3883 FAX : (760) 337-5997
201 E. HOBSONWAY BLYTHE, CA 92225 PHONE : (760) 922-4658 FAX : (760) 922-4660

PROJECT TITLE : CITY OF HOLTVILLE - WATER TREATMENT PLANT IMPROVEMENT PROJECT - 2017
PROJECT NUMBER : 116.455E
SHEET CONTENT : PROCESS FLOW DIAGRAM

EXISTING KEYNOTES

1. EXISTING 6-INCH DIAMETER PVC WATER PIPELINE.
2. EXISTING 12-INCH DIAMETER PVC BACKWASH WATER PIPELINE.
3. EXISTING 12-INCH DIAMETER CONCRETE STORM DRAIN PIPELINE.
4. EXISTING 12-INCH DIAMETER D.I. FLANGED RESILIENT WEDGE GATE VALVE.
5. EXISTING 16-INCH DIAMETER PVC RESERVOIR DRAIN PIPELINE.
6. EXISTING 16-INCH DIAMETER RESERVOIR OVERFLOW PIPELINE.
7. EXISTING 18-INCH DIAMETER PVC FILTERED WATER PIPELINE.
8. EXISTING 16-INCH DIAMETER D.I. RESERVOIR OUTLET PIPELINE.
9. EXISTING 18-INCH DIAMETER D.I. RESERVOIR OUTLET PIPELINE.
10. EXISTING 18-INCH DIAMETER D.I. FLANGED BUTTERFLY VALVE.
11. EXISTING 3/4-INCH DIAMETER PVC ELECTRICAL CONDUIT FOR GATE OPENER.
12. EXISTING 1-INCH DIAMETER PVC ELECTRICAL CONDUIT.
13. FOUR (4) 3/4-INCH DIAMETER PVC CHEMICAL PIPELINES.
14. FOUR (4) 3/4-INCH DIAMETER PVC CHEMICAL PIPELINES (ABANDONED).
15. EXISTING 1-INCH DIAMETER PVC CONDUIT.
16. EXISTING 1-1/2-INCH DIAMETER PVC WATER PIPELINE.
17. EXISTING 2-INCH DIAMETER PVC CONDUIT.
18. EXISTING SODIUM HYPOCHLORITE INJECTION CONCRETE VAULT.
19. EXISTING STORMWATER CATCH BASIN.
20. EXISTING SITE FENCE.
21. EXISTING TREE
22. EXISTING ACCESS ROAD.
23. EXISTING 3/4-INCH DIAMETER PVC ELECTRICAL CONDUIT.
24. EXISTING TWO (2) 1-INCH DIAMETER PVC ELECTRICAL CONDUITS (ABANDONED).
25. EXISTING 2-INCH DIAMETER SCH 80 PVC CHLORINE PIPELINE.
26. EXISTING 2-INCH DIAMETER FLEXIBLE HDPE WATER PIPELINE.
27. EXISTING 8-INCH DIAMETER PVC FILTER DRAIN PIPELINE TO BACKWASH BASIN.
28. EXISTING 12-INCH DIAMETER RAW WATER PIPELINE TO CLARIFIER/FILTER UNITS.
29. EXISTING 16-INCH DIAMETER PVC FILTER DRAIN PIPELINE TO BACKWASH BASIN.
30. EXISTING 16-INCH DIAMETER RESERVOIR DRAIN PIPELINE TO BACKWASH BASIN.
31. EXISTING 3-FOOT WIDE P.C.C. VALLEY GUTTER.
32. EXISTING 2-INCH DIAMETER C-900 FLEXIBLE HDPE PIPELINE.
33. EXISTING 2-INCH DIAMETER SCH 40 PVC CHEMICAL CONDUIT WITH TWO (2) CHLORINE DOSING TUBES.
34. FOUR (4) EXISTING ELECTRICAL CONDUITS: (3) 1-INCH DIAMETER PVC, (1) ¾-INCH DIAMETER PVC.
35. EXISTING 2-INCH DIAMETER PVC RECIRCULATION PIPELINE.
36. EXISTING 4-INCH DIAMETER PVC CLARIFIER SLUDGE PIPELINE.
37. EXISTING ELECTRICAL CONDUIT DUCT BANK.
38. EXISTING 18-INCH DIAMETER C905 PVC FINISH WATER PIPELINE.
39. EXISTING 12-INCH DIAMETER AWWA C900 PVC BACKWASH WATER PIPELINE.
40. EXISTING 16-INCH DIAMETER AWWA C905 PVC DRAIN PIPELINE.
41. EXISTING 10-INCH DIAMETER C905 PVC OVERFLOW PIPELINE.
42. EXISTING 18-INCH DIAMETER CEMENT MORTAR LINED D.I. FLANGED OUTLET PIPELINE.
43. EXISTING RESERVOIR LEVEL TRANSMITTER CONNECTION ASSEMBLY.
44. EXISTING CONCRETE PAD FOR NEW RESERVOIR EXTERIOR LADDER.
45. EXISTING UV DISINFECTION SYSTEM PIPING.
46. EXISTING UV DISINFECTION BUILDING.
47. EXISTING UV COOLING WATER PIPING CONNECTION.
48. EXISTING 3-INCH DIAMETER SCHEDULE 40 PVC PIPELINE.
49. EXISTING PIPE DRAIN CLEANOUT.
50. EXISTING 2-INCH DIAMETER BLOWOFF ASSEMBLY.
51. EXISTING UV DISINFECTION SYSTEM DIVERSION PIPELINE.
52. EXISTING 4-INCH DIAMETER AWWA C900, DR18 PVC CLARIFIER SLUDGE PIPELINE.
53. EXISTING 4-INCH DIAMETER PIPE CLEANOUT.
54. EXISTING 4-INCH DIAMETER SDR-35 PVC RECIRCULATION DRAIN PIPE.
55. EXISTING 1-INCH TYPE K COPPER SOFT U.V. COOLING WATER PIPELINE.
56. EXISTING RESERVOIR CHLORINE SAMPLING CONNECTION ASSEMBLY, RESIDUAL CHLORINE MONITOR AND ASSOCIATED ELECTRICAL, SIGNAL AND CHEMICAL MATERIAL.
57. EXISTING RESERVOIR GROUNDING COPPER WIRE CONNECTION.
58. EXISTING 1" DIAMETER PVC ELECTRICAL CONDUIT AND GROUNG COPPER WIRE CONNECTION.
59. EXISTING GROUND TEST WELL.

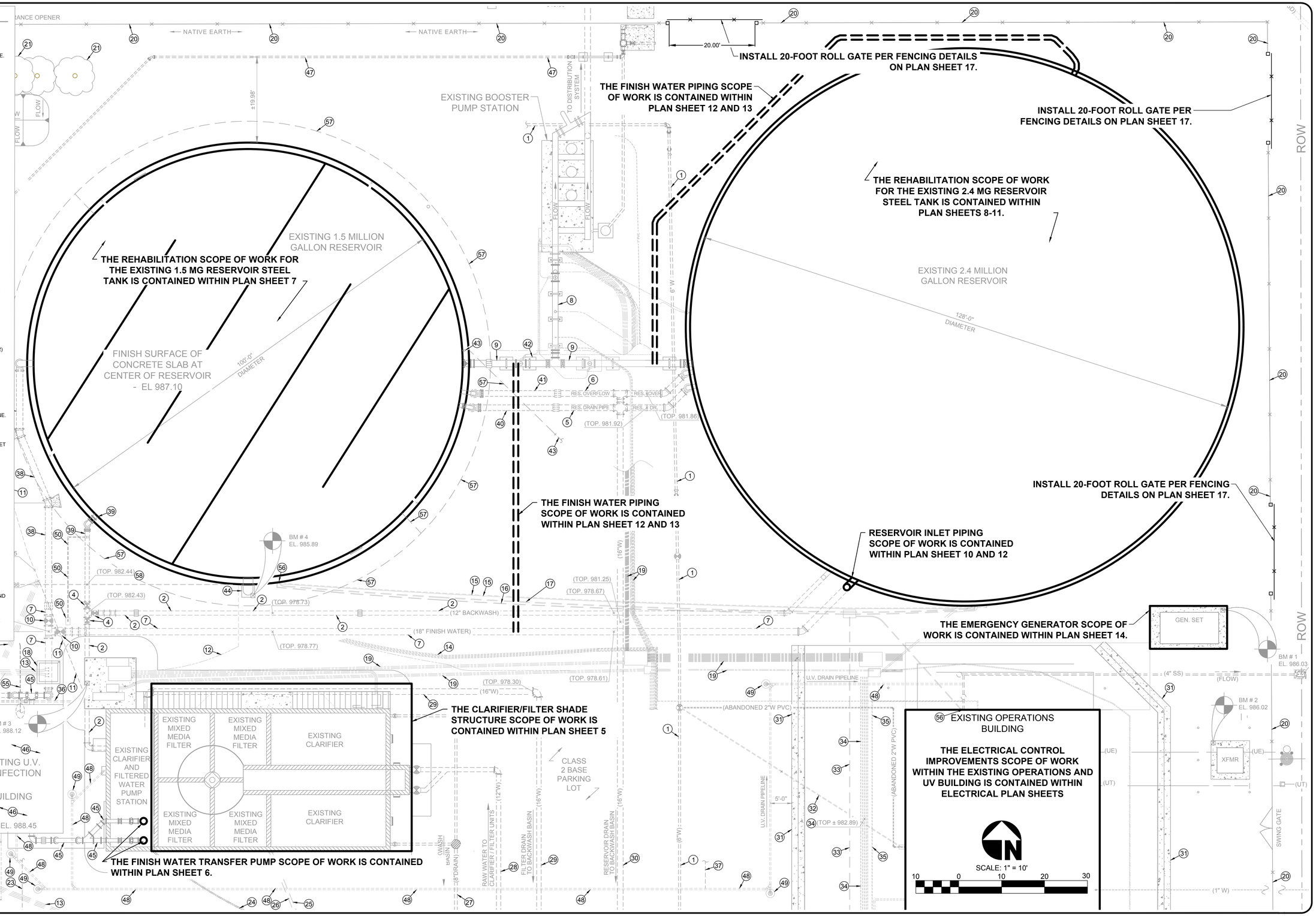

No.	REVISION	APPROVED	DATE

UNAUTHORIZED CHANGES AND USES: The engineer preparing these plans will not be responsible for, or liable for, unauthorized changes to or uses of these plans. All changes to these plans must be in writing and must be approved by the preparer of these plans.

DESIGNED BY: JL/JM	DRAWN BY: DB/JS
SCALE:	CHECKED BY: JM
BENCH MARK No. 2	ELEV.: 986.02

MARKED "X" AT NORTHWEST CORNER OF POWER SERVICE TRANSFORMER SET PCC PAD LOCATED NEAR NORTHEAST CORNER OF EXISTING OPERATIONS BUILDING
ELEVATION = 986.02

PREPARED UNDER THE DIRECT SUPERVISION OF:

JESUS R. MARMOLEJO, P.E. — 80410 R.C.E. No.

09/11/2020 DATE — 03/31/2021 REG. EXP.

REGISTERED PROFESSIONAL ENGINEER — JESUS R. MARMOLEJO — No. 80410 — Exp. 03-31-21 — CIVIL — STATE OF CALIFORNIA

The Holt Group, Inc.
ENGINEERING * SURVEYING * CONSTRUCTION MANAGEMENT * PLANNING
1601 N. IMPERIAL AVE. EL CENTRO, CA 92243 PHONE: (760) 337-3883 FAX: (760) 337-5997
201 E. HOBSONWAY BLYTHE, CA 92225 PHONE: (760) 922-4658 FAX: (760) 922-4660

PROJECT TITLE : CITY OF HOLTVILLE - WATER TREATMENT PLANT IMPROVEMENT PROJECT - 2017

PROJECT NUMBER : 116.455E

SHEET CONTENT : SITE PLAN

SHEET NO. 4 OF 46 SHEETS

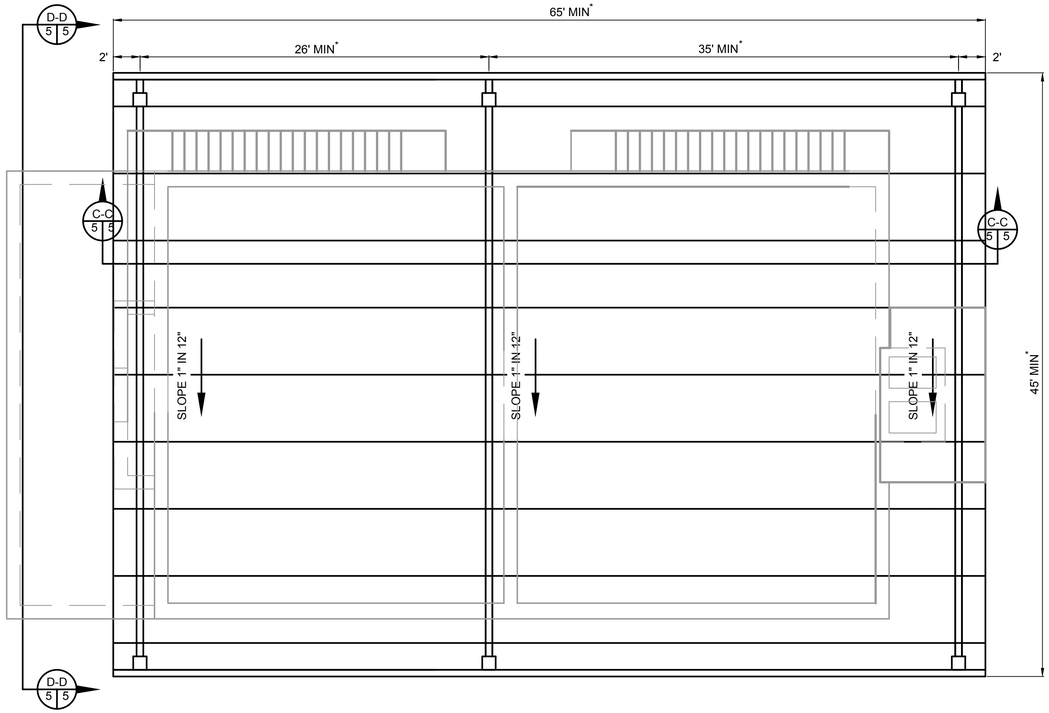

CLARIFIER/FILTER SHADE STRUCTURE ROOF PLAN

SCALE: 3/16"= 1'-0"

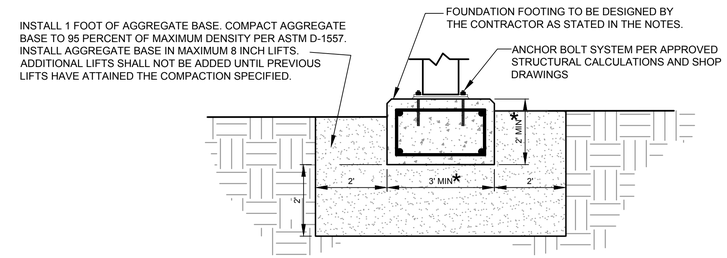

FOOTING DETAIL

SCALE: 1/2" = 1'-0"

E
5 5

NOTES:

* EXACT DIMENSIONS TO BE DETERMINED DURING THE SHOP DRAWING PROCESS.

CONSTRUCT A SHADE STRUCTURE ACCORDING TO THE DESIGN CRITERIA LISTED AND DIMENSIONS ILLUSTRATED ON THIS SHEET AND SECTION 05650 OF THE TECHNICAL SPECIFICATIONS.

THE CONTRACTOR IS TO PROVIDE SHOP DRAWINGS AND STRUCTURAL CALCULATIONS STAMPED BY A CALIFORNIA REGISTERED CIVIL OR STRUCTURAL ENGINEER WHICH SHALL BE SUBMITTED TO THE ENGINEER FOR REVIEW AND APPROVAL DURING THE SHOP DRAWING REVIEW PROCESS. THE PCC SUPPORT FOUNDATIONS INCLUDING ANCHORING SYSTEM,FOR THE CLARIFIER/MIXED MEDIA FILTER SHADE STRUCTURE STEEL COLUMNS SHALL BE INCLUDED WITH THE STRUCTURAL CALCULATIONS AND SHOP DRAWING INFORMATION SUBMITTED TO THE ENGINEER FOR REVIEW. THE SHOP DRAWING SHALL ALSO INCLUDE, A SPECIAL INSPECTION PROGRAM, LISTING OF ANY REQUIRED CONTINUOUS AND PERIODIC INSPECTIONS PER THE LATEST EDITION OF THE CBC, OR COUNTY OF IMPERIAL BUILDING PERMIT REQUIREMENTS OF CONCRETE CONSTRUCTION AND OF SOIL PREPARATION.

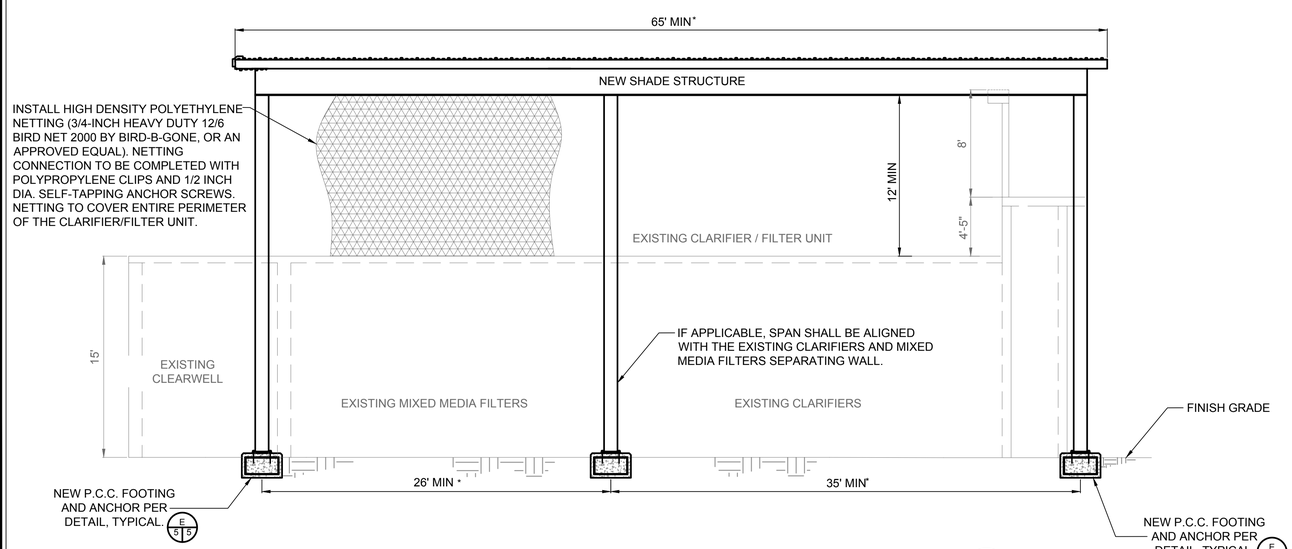

CLARIFIER/FILTER SHADE STRUCTURE SECTION

SCALE: 3/16"= 1'-0"

C-C
5 5

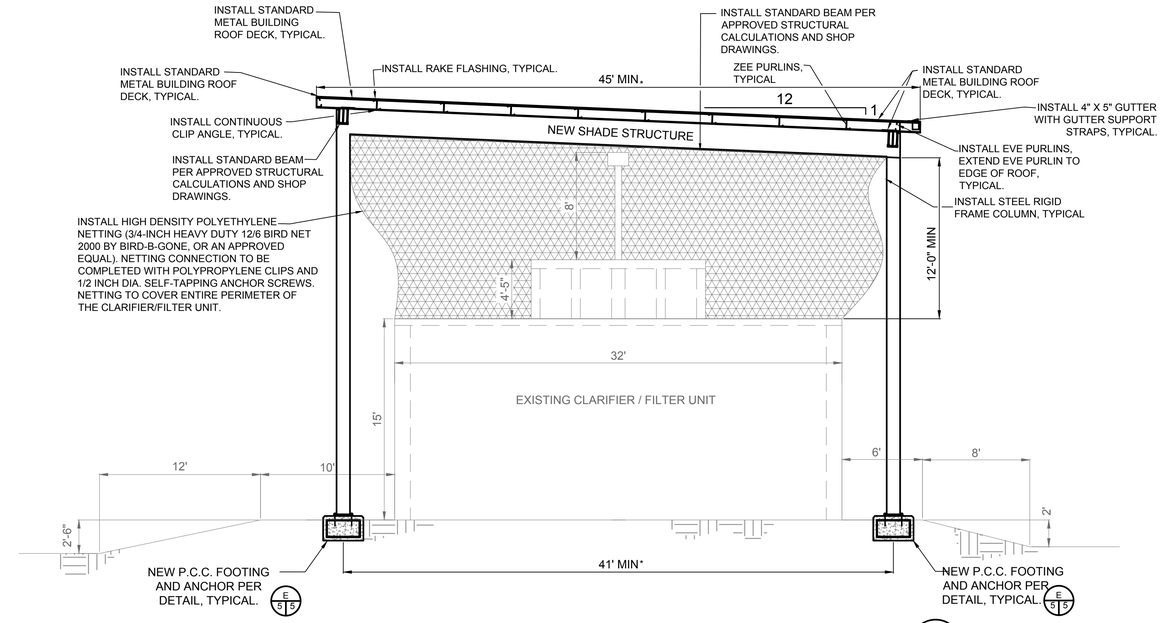

CLARIFIER/FILTER SHADE STRUCTURE SECTION

SCALE: 3/16"= 1'-0"

D-D
5 5

No.	REVISION	APPROVED	DATE

UNAUTHORIZED CHANGES AND USES: The engineer preparing these plans will not be responsible for, or liable for, unauthorized changes to or uses of these plans. All changes to these plans must be in writing and must be approved by the preparer of these plans.

DESIGNED BY: JL/JM	DRAWN BY: DB/JS
SCALE:	CHECKED BY: JM
BENCH MARK No. 2	ELEV.: 986.02

MARKED "X" AT NORTHWEST CORNER OF POWER SERVICE TRANSFORMER SET PCC PAD LOCATED NEAR NORTHEAST CORNER OF EXISTING OPERATIONS BUILDING
ELEVATION = 986.02

PREPARED UNDER THE DIRECT SUPERVISION OF:

JESUS R. MARMOLEJO, P.E.

09/11/2020
DATE

80410
R.C.E. No.

03/31/2021
REG. EXP.

REGISTERED PROFESSIONAL ENGINEER JESUS R. MARMOLEJO No. 80410 Exp. 03-31-21 CIVIL STATE OF CALIFORNIA

The Holt Group, Inc.
ENGINEERING * SURVEYING * CONSTRUCTION MANAGEMENT * PLANNING
1601 N. IMPERIAL AVE. EL CENTRO, CA 92243 PHONE: (760) 337-3883 FAX: (760) 337-5997
201 E. HOBSONWAY BLYTHE, CA 92225 PHONE: (760) 922-4658 FAX: (760) 922-4660

PROJECT TITLE : CITY OF HOLTVILLE - WATER TREATMENT PLANT IMPROVEMENT PROJECT - 2017

PROJECT NUMBER : 116.455E

SHEET CONTENT : CLARIFIER/FILTER SHADE STRUCTURE PLAN, SECTIONS AND DETAILS

SHEET NO. 5 OF 46 SHEETS

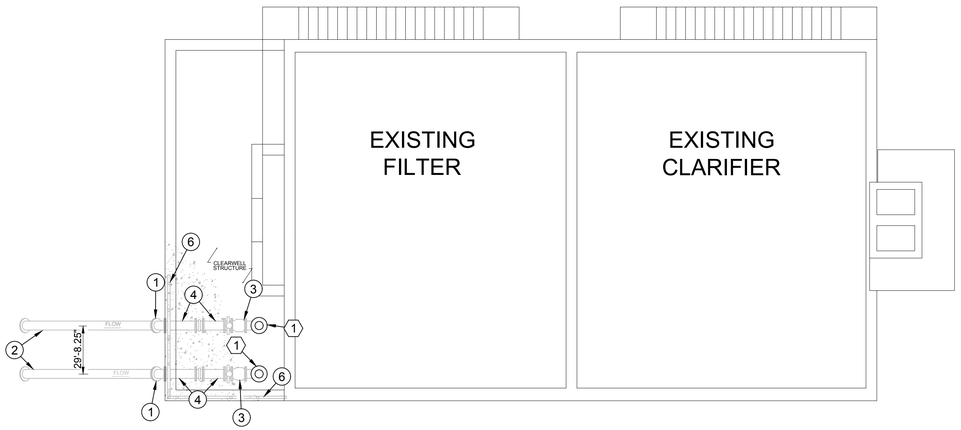

FILTERED WATER TRANSFER PUMP PLAN (A/6)
NOT TO SCALE

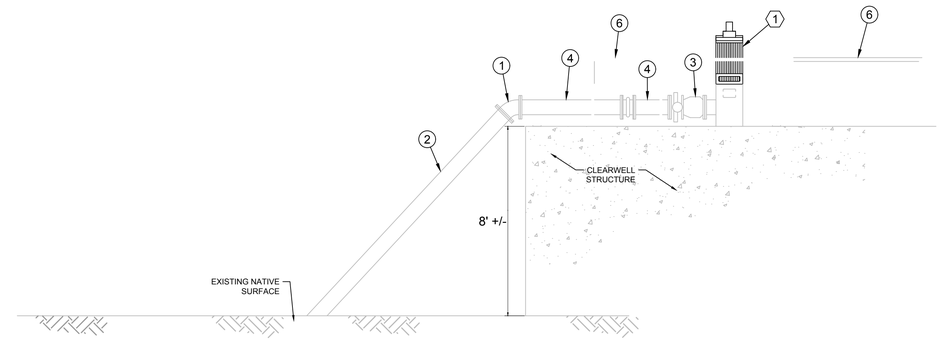

FILTERED WATER TRANSFER PUMP SECTION (A-A/6)
NOT TO SCALE

EXISTING KEYNOTES

1. EXISTING 10-INCH DIAMETER D.I. FLANGED 45 DEGREE ELBOW TO REMAIN.
2. EXISTING 10-INCH DIAMETER D.I. FLANGED SPOOL TO REMAIN.
3. EXISTING 10-INCH DIAMETER GLOBE SILENT CHECK VALVE TO REMAIN.
4. EXISTING 10-INCH DIAMETER PIPE MATERIAL TO REMAIN.
5. EXISTING FILTERED WATER PUMP MOTOR TO BE REPLACED PER TECHNICAL SPECIFICATIONS SECTIONS 15380 AND 16904.
6. EXISTING HANDRAIL TO REMAIN.

CONSTRUCTION KEYNOTES

1. EXISTING FINISH WATER TRANSFER PUMP MOTOR TO BE REPLACED PER TECHNICAL SPECIFICATIONS SECTIONS 15380 AND 16904, MOTOR TO BE INSTALLED WITH THERMAL SWITCH.

No.	REVISION	APPROVED	DATE

UNAUTHORIZED CHANGES AND USES: The engineer preparing these plans will not be responsible for, or liable for, unauthorized changes to or uses of these plans. All changes to these plans must be in writing and must be approved by the preparer of these plans.

DESIGNED BY: JL/JM | DRAWN BY: DB/JS
SCALE: | CHECKED BY: JM
BENCH MARK No. 2 | ELEV.: 986.02

MARKED "X" AT NORTHWEST CORNER OF POWER SERVICE TRANSFORMER SET PCC PAD LOCATED NEAR NORTHEAST CORNER OF EXISTING OPERATIONS BUILDING
ELEVATION = 986.02

PREPARED UNDER THE DIRECT SUPERVISION OF:

JESUS R. MARMOLEJO, P.E. — 80410 R.C.E. No.
09/11/2020 DATE — 03/31/2021 REG. EXP.

REGISTERED PROFESSIONAL ENGINEER — JESUS R. MARMOLEJO — No. 80410 — Exp. 03-31-21 — CIVIL — STATE OF CALIFORNIA

The Holt Group, Inc.
ENGINEERING * SURVEYING * CONSTRUCTION MANAGEMENT * PLANNING
1601 N. IMPERIAL AVE. EL CENTRO, CA 92243 PHONE: (760) 337-3883 FAX: (760) 337-5997
201 E. HOBSONWAY BLYTHE, CA 92225 PHONE: (760) 922-4658 FAX: (760) 922-4660

PROJECT TITLE : CITY OF HOLTVILLE - WATER TREATMENT PLANT IMPROVEMENT PROJECT - 2017
PROJECT NUMBER : 116.455E
SHEET CONTENT : FINISH WATER TRANSFER PUMP MOTOR REPLACEMENT PLAN

SHEET NO. 6 OF 46 SHEETS

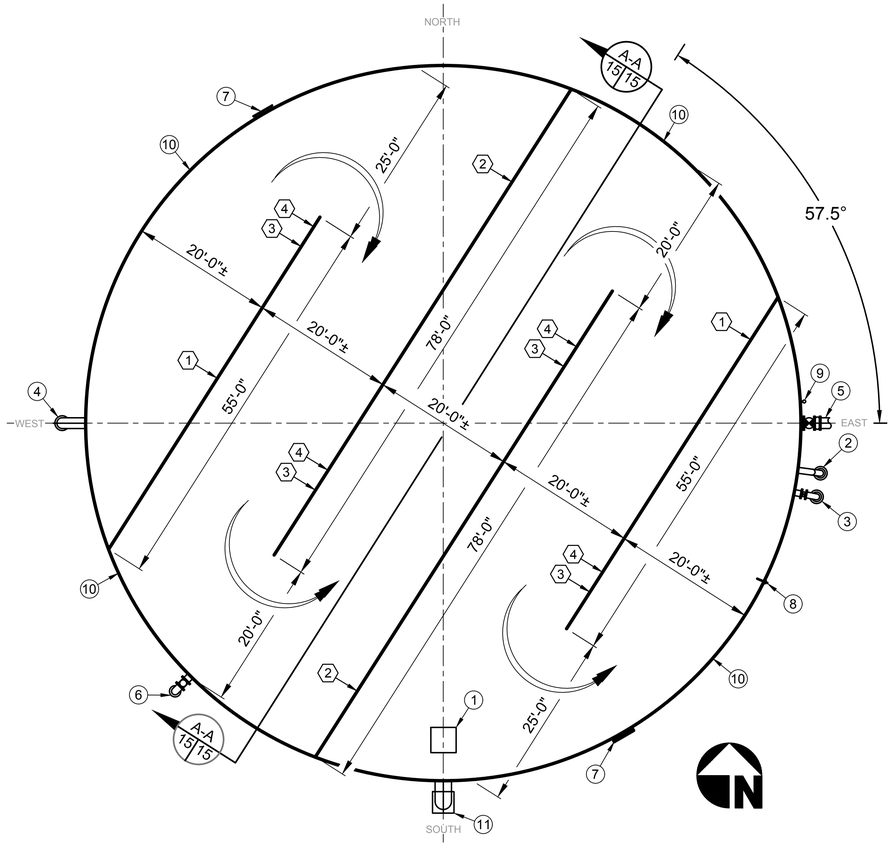

1.5 MG RESERVIOR PLAN

SCALE: NOT TO SCALE

EXISTING KEYNOTES

1. EXISTING ROOF ACCESS HATCH TO REMAIN.
2. EXISTING OVERFLOW PIPE CONNECTION TO REMAIN.
3. EXISTING DRAIN PIPE CONNECTION TO REMAIN.
4. EXISTING 18-INCH DIAMETER INLET PIPELINE TO REMAIN.
5. EXISTING 18-INCH DIAMETER OUTLET PIPELINE TO REMAIN.
6. EXISTING BACKWASH NOZZLE TO REMAIN.
7. EXISTING ACCESS MANWAY TO REMAIN.
8. EXISTING WATER LEVEL GAUGE TO REMAIN.
9. EXISTING LEVEL TRANSMITTER COUPLING TO REMAIN.
10. EXISTING STEEL TANK SIDEWALL TO REMAIN.
11. EXISTING EXTERIOR LADDER TO REMAIN.

CONSTRUCTION KEYNOTES

1. INSTALL BAFFLE FOR A LENGTH OF 55'-0" PER TECHNICAL SPECIFICATION SECTION 13600.
2. INSTALL BAFFLE FOR A LENGTH OF 78'-0" PER TECHNICAL SPECIFICATION SECTION 13600.
3. CONNECT BAFFLE FLOOR OR WALL TO STEEL RESERVOIR FLOOR OR WALL PER DETAIL B ON PLAN SHEET 7, TYPICAL.
4. CONNECT BAFFLE WALL TO STEEL RESERVOIR CEILING PER DETAIL A ON PLAN SHEET 7, TYPICAL.
5. CONNECT BAFFLE/WALL TO STEEL RESERVOIR WALL ON OPEN END OF BAFFLE PER DETAIL C ON PLAN SHEET 7, TYPICAL.

1.5 MG WATER RESERVOIR TANK PARAMETERS

1	DIAMETER	100' - 0" INSIDE DIAMETER		
2	HEIGHT			
		BOTTOM RINGWALL	10' - 4 3/4"	
		MIDDLE RINGWALL	10' - 4"	
		TOP RINGWALL	10' - 4"	
		KNUCKLE	3' - 3/4"	
		TOTAL HEIGHT @ RESERVOIR WALL	34' - 1"	
3	MATERIAL			
		BOTTOM RINGWALL	A36 STEEL	
		MIDDLE RINGWALL	A36 STEEL	
		TOP RINGWALL	A36 STEEL	
		KNUCKLE	A36 STEEL	
		ROOF	A36 STEEL	
4	CAPACITY	GALLONS	FEET	ELEVATION
	MINIMUM OPERATING CAPACITY	1,308,313	22.27	1008.69
	MAXIMUM OPERATING CAPACITY	1,425,809	24.27	1010.89
	OVERFLOW CAPACITY	1,484,556	25.27	1011.89

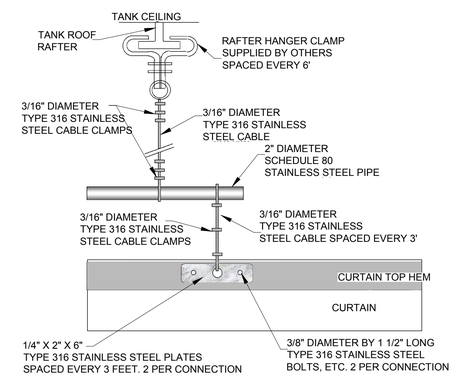

BAFFLE TO TANK CEILING DETAIL (A / 7|7)

NOT TO SCALE

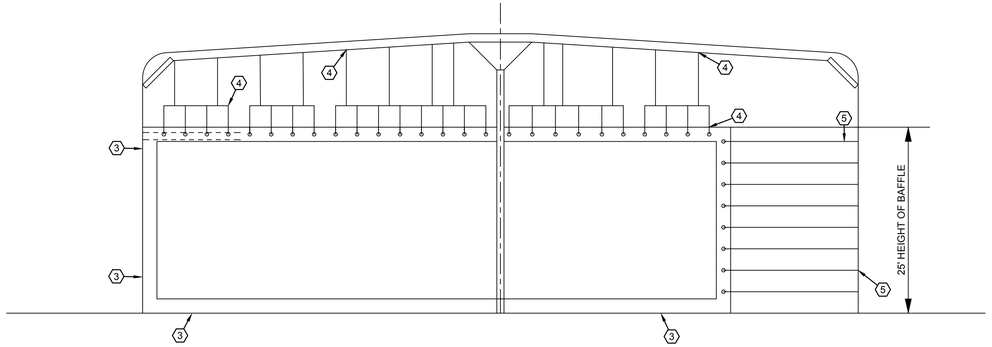

1.5 MG RESERVIOR SECTION (A-A / 7|7)

NOT TO SCALE

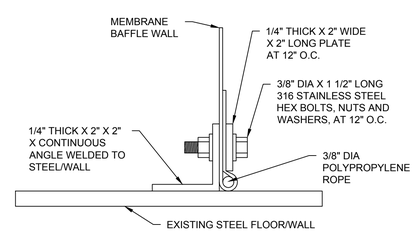

CONTINUOUS FLOOR/WALL CONNECTION DETAIL (B / 7|7)

NOT TO SCALE

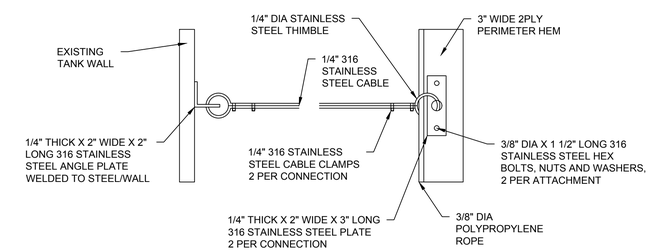

BAFFLE TO TANK WALL DETAIL (C / 7|7)

NOT TO SCALE

No.	REVISION	APPROVED	DATE

UNAUTHORIZED CHANGES AND USES: The engineer preparing these plans will not be responsible for, or liable for, unauthorized changes to or uses of these plans. All changes to these plans must be in writing and must be approved by the preparer of these plans.

DESIGNED BY: JL/JM | DRAWN BY: DB/JS
SCALE: | CHECKED BY: JM
BENCH MARK No. 2 | ELEV.: 986.02
MARKED "X" AT NORTHWEST CORNER OF POWER SERVICE TRANSFORMER SET PCC PAD LOCATED NEAR NORTHEAST CORNER OF EXISTING OPERATIONS BUILDING
ELEVATION = 986.02

PREPARED UNDER THE DIRECT SUPERVISION OF:

JESUS R. MARMOLEJO, P.E. — 80410 R.C.E. No.
09/11/2020 DATE — 03/31/2021 REG. EXP.

REGISTERED PROFESSIONAL ENGINEER JESUS R. MARMOLEJO No. 80410 Exp. 03-31-21 CIVIL STATE OF CALIFORNIA

The Holt Group, Inc.
ENGINEERING * SURVEYING * CONSTRUCTION MANAGEMENT * PLANNING
1601 N. IMPERIAL AVE. EL CENTRO, CA 92243 PHONE: (760) 337-3883 FAX: (760) 337-5997
201 E. HOBSONWAY BLYTHE, CA 92225 PHONE: (760) 922-4658 FAX: (760) 922-4660

PROJECT TITLE : CITY OF HOLTVILLE - WATER TREATMENT PLANT IMPROVEMENT PROJECT - 2017
PROJECT NUMBER : 116.455E
SHEET CONTENT : 1.5 MG WATER TANK PLAN, SECTION AND DETAILS

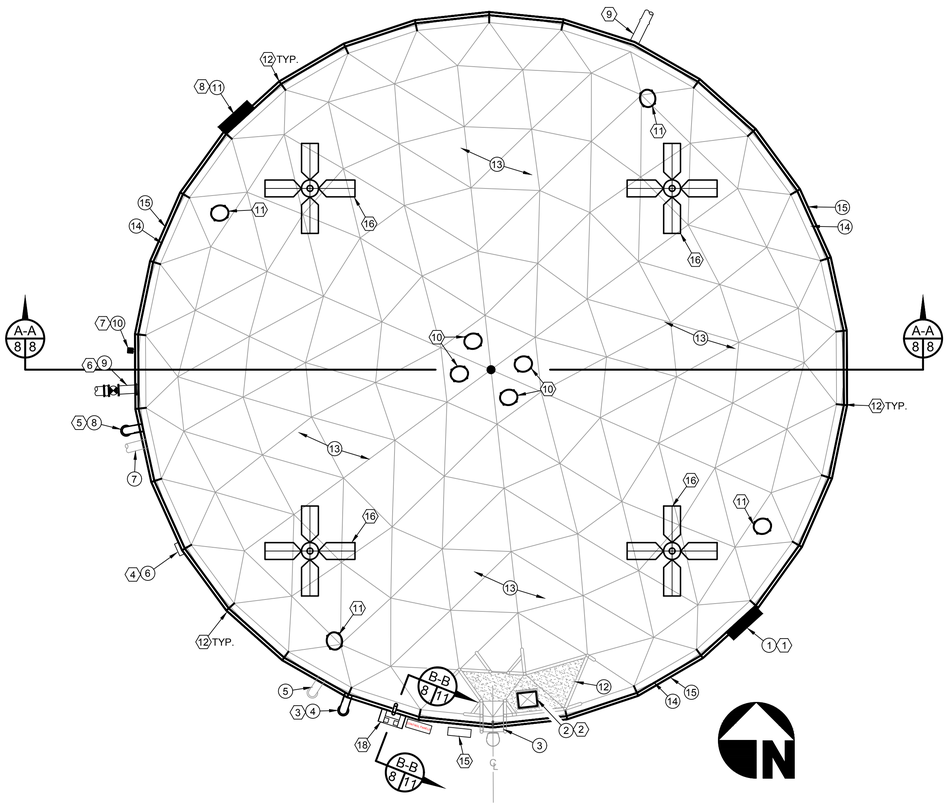

2.4 MG WATER TANK PLAN

NOT TO SCALE

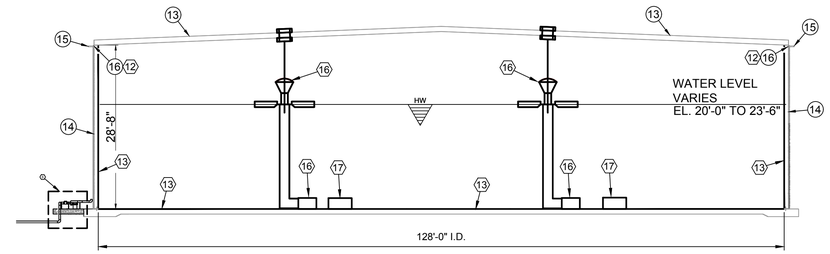

2.4 MG WATER TANK SECTION

NOT TO SCALE

A-A
8 8

EXISTING KEYNOTES

1. EXISTING 30-INCH DIAMETER ACCESS MANHOLE AND SUMP.
2. EXISTING ROOF HATCH AND INTERIOR LADDER.
3. EXISTING EXTERIOR LADDER AND SAFETY CAGE TO REMAIN.
4. EXISTING 18-INCH DIAMETER RESERVOIR INLET PIPELINE.
5. EXISTING 12-INCH DIAMETER RESERVOIR BACKWASH PIPELINE TO REMAIN.
6. EXISTING LEVEL GAUGE.
7. EXISTING 12-INCH DIAMETER RESERVOIR DRAIN PIPELINE TO REMAIN.
8. EXISTING 12-INCH DIAMETER RESERVOIR OVERFLOW PIPELINE.
9. EXISTING 18-INCH DIAMETER RESERVOIR OUTLET PIPELINE.
10. EXISTING PRESSURE TRANSMITTER MOUNTING ON 1-INCH NOZZLE.
11. EXISTING CLEAN OUT ACCESS DOOR AND SUMP.
12. EXISTING 1 ½ - INCH - DIAMETER PIPE HANDRAIL AROUND HATCH, VENT, AND PLATFORM.
13. EXISTING ALUMINUM DOME ROOF TO REMAIN.
14. EXISTING STEEL TANK WALLS.
15. EXISTING EXTERIOR WIND GIRDER, TYPICAL AROUND THE TOP OF THE TANK TO REMAIN.
16. EXISTING ROOF TO WALL STEEL SHOE SUPPORT.

CONSTRUCTION KEYNOTES

1. REMOVE AND REPLACE 30-INCH DIAMETER ACCESS MANHOLE'S NEOPRENE GASKET PER DETAIL C ON SHEET 9.
2. REMOVE AND REPLACE ROOF ACCESS HATCH NEOPRENE GASKET PER DETAIL A ON SHEET 9.
3. REHABILITATE EXISTING 18-INCH DIAMETER RESERVOIR INLET PIPELINE PER SPECIFICATION SECTION 13290 AND DETAIL G ON SHEET 10.
4. REMOVE AND REPLACE VARIOUS PARTS OF THE EXISTING LEVEL GAUGE PER DETAIL M ON SHEET 10.
5. REHABILITATE EXISTING 12-INCH DIAMETER RESERVOIR OVERFLOW PIPELINE PER SPECIFICATION SECTION 13290 AND DETAIL H ON SHEET 10.
6. SEAL THE EXISTING 18-INCH DIAMETER RESERVOIR OUTLET PIPELINE PER DETAIL J ON SHEET 10.
7. PROTECT IN PLACE EXISTING PRESSURE TRANSMITTER MOUNTING ON 1-INCH NOZZLE DURING REHABILITATION PER DETAIL B ON SHEET 9.
8. REMOVE AND REPLACE EXISTING 36-INCH DIAMETER CLEAN OUT ACCESS MANHOLE NEOPRENE GASKET AND REHABILITATE TANK SUMP PER SPECIFICATION SECTION 13290 PER DETAIL D ON SHEET 9.
9. INSTALL NEW 18-INCH DIAMETER RESERVOIR OUTLET PIPELINE PER DETAIL P ON SHEET 13.
10. REMOVE AND REPLACE 20-INCH GRAVITY VENT (FOUR (4) TOTAL) PER DETAIL O ON PLAN SHEET 11.
11. INSTALL NEW 20-INCH GRAVITY VENT (FOUR (4) TOTAL) PER DETAIL O ON PLAN SHEET 11.
12. REMOVE AND REPLACE STEEL SHOE SUPPORT AND HARDWARE PER DETAIL N ON SHEET 11. (30 TOTAL)
13. REHABILITATE 2.4 MG WATER RESERVOIR STORAGE TANK INTERIOR WALL, BOTTOM, AND APPURTENANCES PER SECTION 13290 OF THE TECHNICAL SPECIFICATIONS.
14. REMOVE AND REPLACE INTERIOR LADDER PER DETAIL E ON SHEET 9 AND SECTION 13290 OF THE TECHNICAL SPECIFICATIONS.
15. INSTALL CATHODIC PROTECTION SYSTEM PER SECTION 13500 OF THE TECHNICAL SPECIFICATIONS.
16. INSTALL AERATOR W/ ROOF HANGER.
17. INSTALL SUBMERSIBLE MIXER W/ ROOF HANGER.
18. INSTALL TTHM REMOVAL SYSTEM PER SECTION B-B AND DETAILS P AND Q ON PLAN SHEET 11.

2.4 MG WATER RESERVOIR TANK PARAMETERS

1	DIAMETER	128' - 0" INSIDE DIAMETER			
2	CHARACTERISTIC		HEIGHT	THICKNESS	WELD
		TANK BOTTOM	-	¼"	LAP
		BOTTOM RINGWALL	8' - 9 ½"	½"	BUTT
		MIDDLE RINGWALL	9' - 11 ½"	⅜"	BUTT
		TOP RINGWALL	9' - 11 ½"	5/16"	BUTT
		KNUCKLE	------	-----	-----
		TOTAL HEIGHT @ RESERVOIR WALL	28' - 8 ½"		
3	MATERIAL	TANK BOTTOM	A36 STEEL		
		BOTTOM RINGWALL	A36 STEEL		
		MIDDLE RINGWALL	A36 STEEL		
		TOP RINGWALL	A36 STEEL		
		KNUCKLE	------		
		DOME ROOF	ALUMINUM		

4	CAPACITY	GALLONS	FEET	ELEVATION
	MINIMUM OPERATING CAPACITY	2,117,700	22.00	1008.55
	MAXIMUM OPERATING CAPACITY	2,262,088	23.50	1010.05
	OVERFLOW CAPACITY	2,419,953	25.14	1011.69

5 TANK TTHM DATA

SAMPLE DATE	2.4 MG TANK TTHMs (PPB)	SITE 9 (HYDRANT @ MELON AVE. & UNDERWOOD RD. - 1 MILE FROM WTP) (PPB)	SITE 10 (HYDRANT @ 2009 ANDERHOLT RD. - 2 MILES FROM WTP) (PPB)
8/13/14	120	91	93
11/19/14	96	83	84
2/11/15	52	86	88
5/13/15	99	110	110
8/12/15	120	140	140
11/18/15	66	77	80
2/10/16	60	65	66
5/11/16	84	93	91
8/9/16	87	78	93
11/8/16	65	60	54
2/15/17	44	50	44
5/10/17	47	69	58

6 FLOWS

	AVERAGE TOTAL FLOW THROUGH: (GPM)	PEAK TOTAL FLOW THROUGH: (GPM)	MAX SYSTEM FLOW RATE: (GPM)	MAX FILL RATE: (GPM)
WHOLE SYSTEM	806	1,514	1,514	-
THROUGH TANKS (TANKS IN SERIES)	889	1,400	-	1,400

No.	REVISION	APPROVED	DATE

UNAUTHORIZED CHANGES AND USES: The engineer preparing these plans will not be responsible for, or liable for, unauthorized changes to or uses of these plans. All changes to these plans must be in writing and must be approved by the preparer of these plans.

DESIGNED BY: JL/JM | DRAWN BY: DB/JS
SCALE: | CHECKED BY: JM
BENCH MARK No. 2 | ELEV.: 986.02
MARKED "X" AT NORTHWEST CORNER OF POWER SERVICE TRANSFORMER SET PCC PAD LOCATED NEAR NORTHEAST CORNER OF EXISTING OPERATIONS BUILDING
ELEVATION = 986.02

PREPARED UNDER THE DIRECT SUPERVISION OF:

JESUS R. MARMOLEJO, P.E.
09/11/2020
DATE

80410
R.C.E. No.
03/31/2021
REG. EXP.

REGISTERED PROFESSIONAL ENGINEER JESUS R. MARMOLEJO No. 80410 Exp. 03-31-21 CIVIL STATE OF CALIFORNIA

The Holt Group, Inc.
ENGINEERING * SURVEYING * CONSTRUCTION MANAGEMENT * PLANNING
1601 N. IMPERIAL AVE. EL CENTRO, CA 92243 PHONE : (760) 337-3883 FAX : (760) 337-5997
201 E. HOBSONWAY BLYTHE, CA 92225 PHONE : (760) 922-4658 FAX : (760) 922-4660

PROJECT TITLE : CITY OF HOLTVILLE - WATER TREATMENT PLANT IMPROVEMENT PROJECT - 2017

PROJECT NUMBER : 116.455E

SHEET CONTENT : 2.4 MG WATER TANK PIPING AND APPURTENANCES PLAN

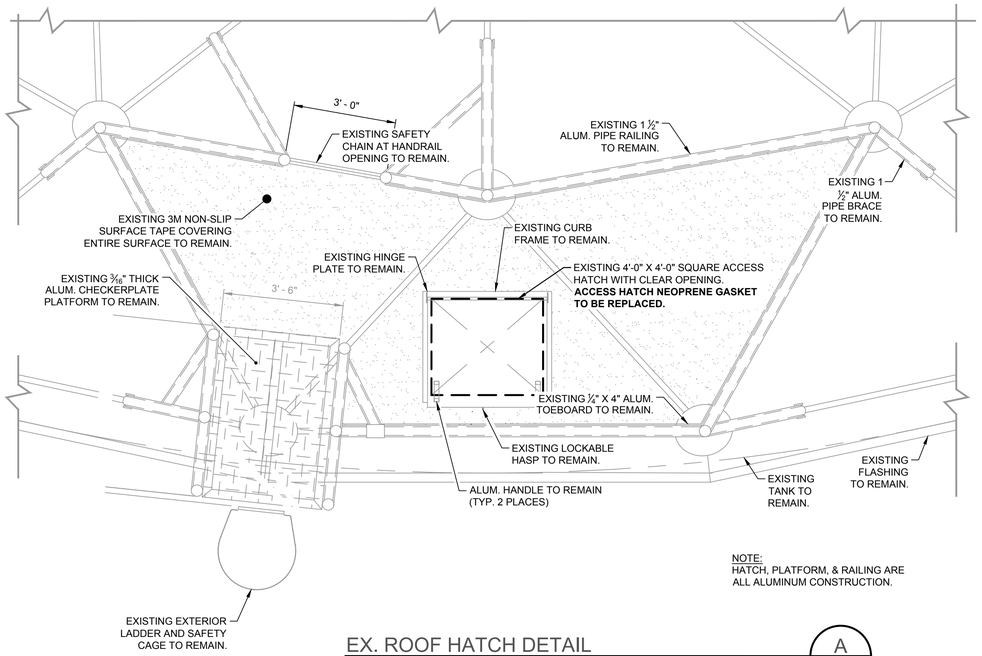

NOTE:
HATCH, PLATFORM, & RAILING ARE ALL ALUMINUM CONSTRUCTION.

EX. ROOF HATCH DETAIL

NOT TO SCALE

A 8|9

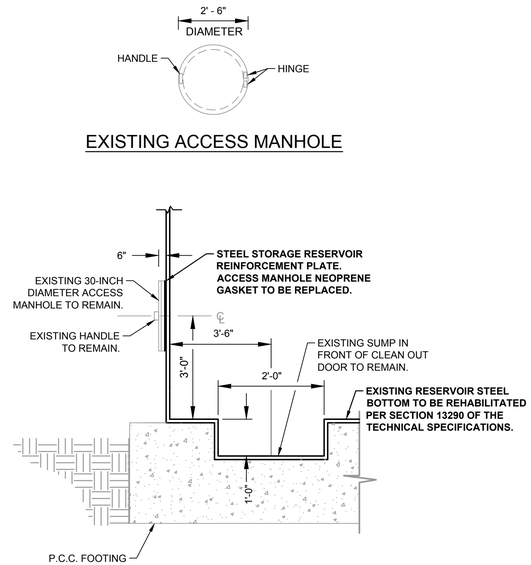

EXISTING ACCESS MANHOLE

EX. ACCESS MANHOLE AND SUMP DETAIL

NOT TO SCALE

C 8|9

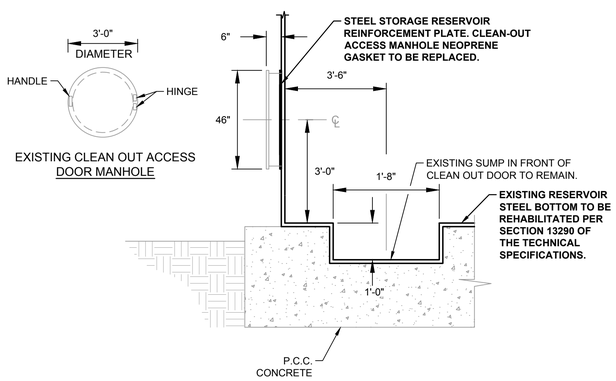

EX. CLEAN OUT ACCESS DOOR AND SUMP DETAIL

NOT TO SCALE

D 8|9

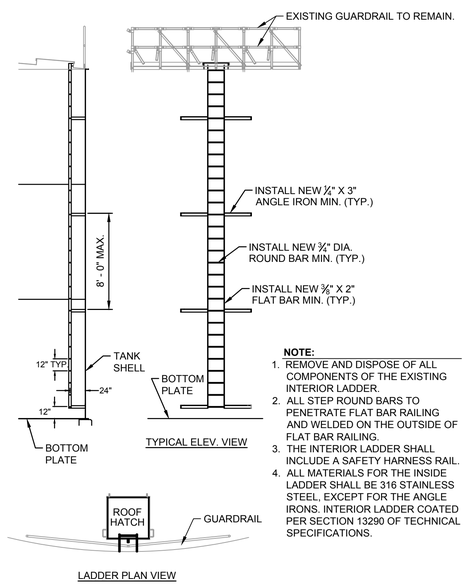

NOTE:

1. REMOVE AND DISPOSE OF ALL COMPONENTS OF THE EXISTING INTERIOR LADDER.
2. ALL STEP ROUND BARS TO PENETRATE FLAT BAR RAILING AND WELDED ON THE OUTSIDE OF FLAT BAR RAILING.
3. THE INTERIOR LADDER SHALL INCLUDE A SAFETY HARNESS RAIL.
4. ALL MATERIALS FOR THE INSIDE LADDER SHALL BE 316 STAINLESS STEEL, EXCEPT FOR THE ANGLE IRONS. INTERIOR LADDER COATED PER SECTION 13290 OF TECHNICAL SPECIFICATIONS.

NEW INTERIOR LADDER DETAIL

NOT TO SCALE

E 8|9

No.	REVISION	APPROVED	DATE

UNAUTHORIZED CHANGES AND USES: The engineer preparing these plans will not be responsible for, or liable for, unauthorized changes to or uses of these plans. All changes to these plans must be in writing and must be approved by the preparer of these plans.

DESIGNED BY: JL/JM	DRAWN BY: DB/JS
SCALE:	CHECKED BY: JM
BENCH MARK No. 2	ELEV.: 986.02

MARKED "X" AT NORTHWEST CORNER OF POWER SERVICE TRANSFORMER SET PCC PAD LOCATED NEAR NORTHEAST CORNER OF EXISTING OPERATIONS BUILDING
ELEVATION = 986.02

PREPARED UNDER THE DIRECT SUPERVISION OF:

JESUS R. MARMOLEJO, P.E.

09/11/2020
DATE

80410
R.C.E. No.

03/31/2021
REG. EXP.

REGISTERED PROFESSIONAL ENGINEER JESUS R. MARMOLEJO No. 80410 Exp. 03-31-21 CIVIL STATE OF CALIFORNIA

The Holt Group, Inc.
ENGINEERING * SURVEYING * CONSTRUCTION MANAGEMENT * PLANNING
1601 N. IMPERIAL AVE. EL CENTRO, CA 92243 PHONE: (760) 337-3883 FAX: (760) 337-5997
201 E. HOBSONWAY BLYTHE, CA 92225 PHONE: (760) 922-4658 FAX: (760) 922-4660

PROJECT TITLE : CITY OF HOLTVILLE - WATER TREATMENT PLANT IMPROVEMENT PROJECT - 2017

PROJECT NUMBER : 116.455E

SHEET CONTENT : 2.4 MG TANK DETAILS 1

SHEET NO. 9 OF 46 SHEETS

EXISTING KEYNOTES

1. 18-INCH DIAMETER AWWA C905 DR 25 PVC WATER PIPELINE SECTION.
2. 18-INCH DIAMETER DUCTILE IRON RESTRAINED JOINT FITTING WITH 316 STAINLESS STEEL HARDWARE.
3. 18-INCH DIAMETER CEMENT MORTAR LINED DUCTILE IRON MECHANICAL JOINT BY FLANGE 90 DEGREE ELBOW WITH 316 STAINLESS STEEL HARDWARE.
4. 18-INCH DIAMETER MORTAR LINED DUCTILE IRON FLANGED 90 DEGREE ELBOW WITH 316 STAINLESS STEEL HARDWARE.
5. 18-INCH DIAMETER CEMENT MORTAR LINED CLASS 53 DUCTILE IRON FLANGED SPOOL.
6. 18-INCH DIAMETER FLANGED RUBBER EXPANSION JOINT.
7. 18-INCH DIAMETER CEMENT MORTAR LINED DUCTILE IRON FLANGED NOZZLE WITH FLANGE GASKETS AND ASSOCIATED HARDWARE.
8. 18-INCH DIAMETER DUCTILE IRON STEEL REINFORCING BACKING PLATE AT THE SIDEWALL PENETRATION.
9. PIPE SUPPORT BRACKETS AND ASSOCIATED HARDWARE.
10. 18-INCH DIAMETER CEMENT MORTAR LINED CLASS 53 DUCTILE IRON FLANGED SPOOL.
11. ANCHOR BLOCK

CONSTRUCTION KEYNOTES

1. TANK APPURTENANCES TO BE REHABILITATED PER SECTION 13290 OF THE TECHNICAL SPECIFICATIONS.
2. INSTALL 18" X 18" X 18" DIA. DI MORTAR LINED CLASS 53 TEE.
3. CUT AND WELD NEW FLANGE TO EXISTING 18-INCH DIA. DI PIPE. THE NEW FLANGE SHALL HAVE IDENTICAL DIMENSIONS, BOLT PATTERNS, TO ALIGN WITH THE NEW TEE CONNECTION.
4. INSTALL 18-INCH DIA. DI STEEL REINFORCING BACKING PLATE AT THE SIDEWALL PENETRATION.
5. INSTALL 18-INCH DIA. DI CEMENT MORTAR LINED FLANGED NOZZLE WITH FLANGE GASKETS AND ASSOCIATED HARDWARE. INSTALL 18-INCH DIA. DI FL X FL BUTTERFLY VALVE WITH HANDWHEEL OPERATOR AND 316 SS HARDWARE.
6. RELOCATE EXISTING PIPE SUPPORT BRACKETS AND ASSOCIATED HARDWARE ABOVE NEW 18-INCH TEE.
7. RESERVOIR STEEL SIDE WALL TO BE REHABILITATED PER SECTION 13290 OF THE TECHNICAL SPECIFICATIONS.
8. RESERVOIR STEEL BOTTOM PLATE TO BE REHABILITATED PER SECTION 13290 OF THE TECHNICAL SPECIFICATIONS.

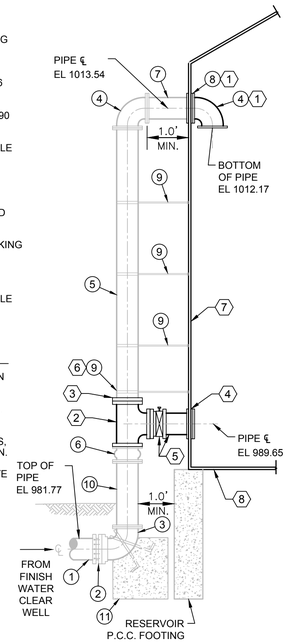

EX. 18-INCH TANK INLET DETAIL

NOT TO SCALE

G 8 10

EXISTING KEYNOTES

1. 16-INCH DIAMETER AWWA C905 DR 25 PVC WATER PIPELINE SECTION.
2. 16-INCH DIAMETER DUCTILE IRON RESTRAINED JOINT FITTING WITH 316 S.S. HARDWARE.
3. 16-INCH DIAMETER CEMENT MORTAR LINED DUCTILE IRON MECHANICAL JOINT 90 DEGREE ELBOW WITH 316 S.S. HARDWARE.
4. 12-INCH DIAMETER CEMENT MORTAR LINED DUCTILE IRON FLANGED SHORT RADIUS 90 DEGREE ELBOW WITH 316 S.S. HARDWARE.
5. 12-INCH DIAMETER CEMENT MORTAR LINED CLASS 53 DUCTILE IRON FLANGED SPOOL.
6. 12-INCH X 16-INCH DIAMETER FLANGED BY PLAIN END WEIR CONE.
7. CORROSION RESISTANT 316 S.S. #16 MESH INSECT SCREEN ATTACHED TO ⅜-INCH MESH.
8. 12-INCH DIAMETER CEMENT MORTAR LINED DUCTILE IRON FLANGED NOZZLE WITH FLANGE GASKETS AND ASSOCIATED HARDWARE.
9. 12-INCH DIAMETER DUCTILE IRON STEEL REINFORCING BACKING PLATE AT THE SIDEWALL PENETRATION.
10. 2-INCH THICK 316 S.S. STRAP AROUND THE PIPE.
11. PIPE SUPPORT BRACKETS AND ASSOCIATED HARDWARE.
12. 16-INCH DIAMETER DUCTILE IRON TRANSITION COUPLING.
13. ANCHOR BLOCK.

CONSTRUCTION KEYNOTES

1. TANK APPURTENANCES TO BE REHABILITATED PER SECTION 13290 OF THE TECHNICAL SPECIFICATIONS.

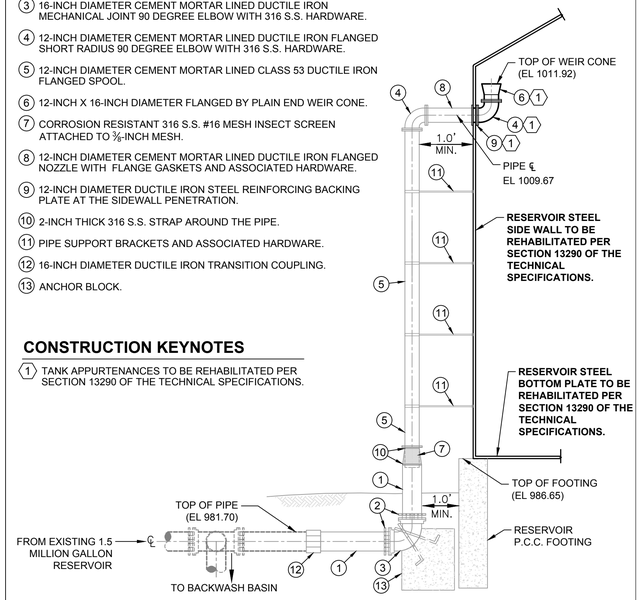

EX. 12-INCH TANK OVERFLOW PIPE DETAIL

NOT TO SCALE

H 8 10

EXISTING KEYNOTES

1. 18-INCH DIAMETER CEMENT MORTAR LINED CLASS 53 DUCTILE IRON FLANGED SPOOL.
2. 18-INCH DIAMETER FLANGED RUBBER EXPANSION JOINT.
3. 18-INCH DIAMETER DUCTILE IRON FLANGED BUTTERFLY VALVE WITH HANDWHEEL OPERATOR AND ASSOCIATED HARDWARE.
4. 18-INCH DIAMETER CEMENT MORTAR LINED DUCTILE IRON FLANGED NOZZLE WITH FLANGE GASKETS AND ASSOCIATED HARDWARE.
5. 18-INCH DIAMETER DUCTILE IRON STEEL REINFORCING BACKING PLATE AT THE SIDEWALL PENETRATION.
6. ADJUSTABLE PIPE SUPPORT AND FOOTING.
7. EXISTING 18-INCH DIAMETER FLANGED DUCTILE IRON TEE WITH 16-INCH BRANCH.
8. 18-INCH DIAMETER FLANGED MAGNETIC FLOW METER WITH INTEGRAL MOUNTED TRANSMITTER AND GROUNDING PER THE ELECTRICAL SPECIFICATIONS.
9. EXISTING 18-INCH DIAMETER, CLASS 53 DUCTILE IRON EPOXY LINED AND COATED PIPE.
10. 1-INCH STEEL TAP FOR WATER SAMPLING.
11. 18-INCH DIAMETER FUSION EPOXY COATED STRAIGHT SLEEVE TRANSITION COUPLING WITH RESTRAINT SYSTEM.

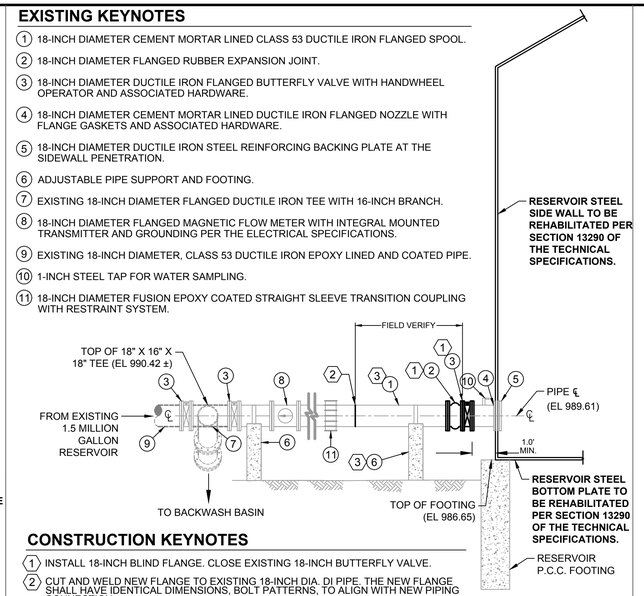

CONSTRUCTION KEYNOTES

1. INSTALL 18-INCH BLIND FLANGE. CLOSE EXISTING 18-INCH BUTTERFLY VALVE.
2. CUT AND WELD NEW FLANGE TO EXISTING 18-INCH DIA. DI PIPE. THE NEW FLANGE SHALL HAVE IDENTICAL DIMENSIONS, BOLT PATTERNS, TO ALIGN WITH NEW PIPING CONNECTION.
3. REMOVE AND DISPOSE EXISTING 18-INCH DIA. DI PIPING, PIPE SUPPORT AND OTHER HARDWARE.

EX. 18-INCH TANK OUTLET PIPE DETAIL

NOT TO SCALE

J 8 10

BILL OF MATERIALS

NO.	DESCRIPTION	TOTAL QTY.	SPECIFICATION
1	SHEAVE ELBOW	2	CAST ALUM.
2	CABLE CONDUIT	1	ALUMINUM
3	**HALF COUPLING***	**1**	**SS 316**
4	CABLE CONDUIT	1	ALUMINUM
5	CABLE CONDUIT	1	ALUMINUM
6	**FLOAT GUIDE WIRE***	**2**	**SS 316**
7	BOLT, NUT & LOCK WASHER	6	GALV.
8	SUPPORT CLIP	3	ALUMINUM
9	SUPPORT CLIP	3	SS
10	FORMED TARGET	1	SS
11	FLORESCENT ORANGE TAPE	1	VINYL
12	U-BOLT	1	GALV.
13	TARGET SUPPORT CLIP	1	SS
14	HEAVY DUTY INDICATOR BOARD	1	ALUMINUM
15	FULL SCALE TAPE	1	VINYL
16	**FLOAT CABLE***	**1**	**SS 316**
17	**FLOAT***	**1**	**SS 316**
18	**CABLE CRIMP***	**6**	**SS 316**
19	**FLOAT GUIDE RING***	**3**	**SS 316**
20	**FLOOR TAB***	**2**	**SS 316**
21	**PIPE CAP***	**2**	**SS 316**
22	**BOLT, NUT & LOCK WASHER***	**2**	**SS 316**
23	**TENSIONER HOUSING***	**2**	**SS 316**
24	**SPRING***	**2**	**SS 316**

SS = CORROSION RESISTANT STAINLESS STEEL ALLOY
HDG = HOT DIP GALVANIZED
***MATERIALS TO BE REMOVED AND REPLACED**

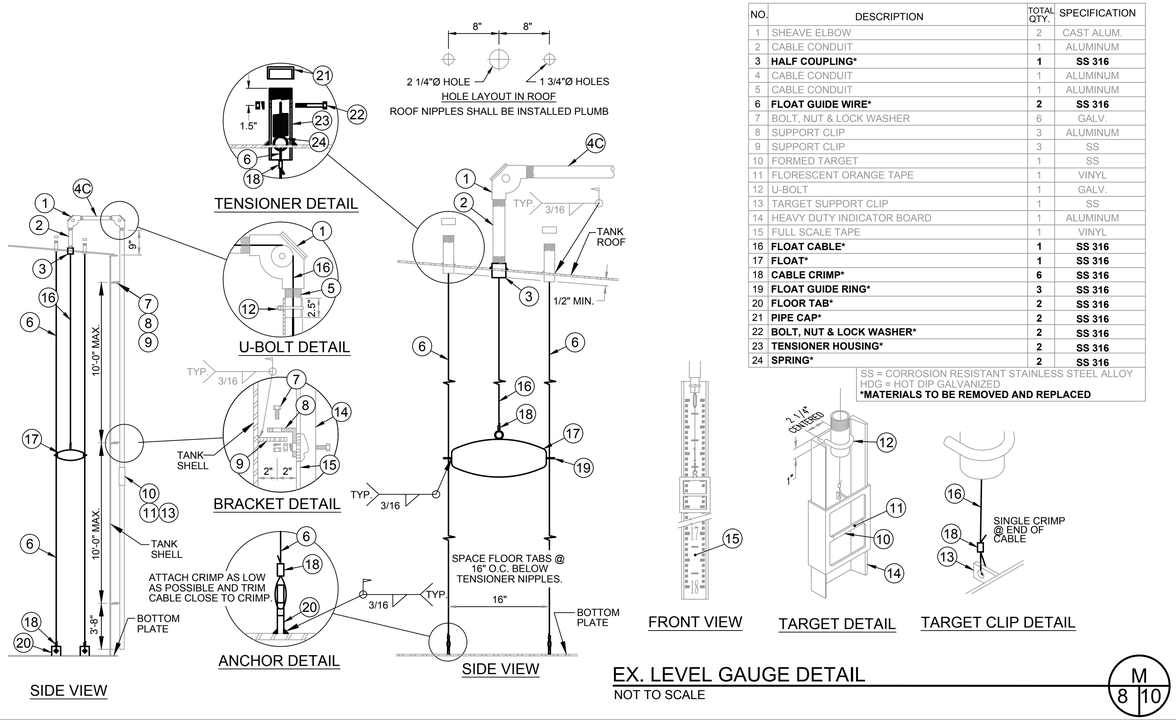

EX. LEVEL GAUGE DETAIL

NOT TO SCALE

M 8 10

No.	REVISION	APPROVED	DATE

UNAUTHORIZED CHANGES AND USES: The engineer preparing these plans will not be responsible for, or liable for, unauthorized changes to or uses of these plans. All changes to these plans must be in writing and must be approved by the preparer of these plans.

DESIGNED BY: JL/JM | DRAWN BY: DB/JS
SCALE: | CHECKED BY: JM
BENCH MARK No. 2 | ELEV.: 986.02
MARKED "X" AT NORTHWEST CORNER OF POWER SERVICE TRANSFORMER SET PCC PAD LOCATED NEAR NORTHEAST CORNER OF EXISTING OPERATIONS BUILDING
ELEVATION = 986.02

PREPARED UNDER THE DIRECT SUPERVISION OF:
JESUS R. MARMOLEJO, P.E.
80410 R.C.E. No.
09/11/2020 DATE
03/31/2021 REG. EXP.

REGISTERED PROFESSIONAL ENGINEER JESUS R. MARMOLEJO No. 80410 Exp. 03-31-21 CIVIL STATE OF CALIFORNIA

The Holt Group, Inc.
ENGINEERING * SURVEYING * CONSTRUCTION MANAGEMENT * PLANNING
1601 N. IMPERIAL AVE. EL CENTRO, CA 92243 PHONE: (760) 337-3883 FAX: (760) 337-5997
201 E. HOBSONWAY BLYTHE, CA 92225 PHONE: (760) 922-4658 FAX: (760) 922-4660

PROJECT TITLE : CITY OF HOLTVILLE - WATER TREATMENT PLANT IMPROVEMENT PROJECT - 2017
PROJECT NUMBER : 116.455E
SHEET CONTENT : TANK APPURTENANCES 2

SHEET NO. 10 OF 46 SHEETS

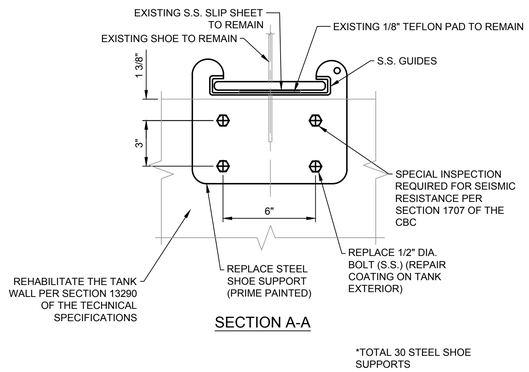

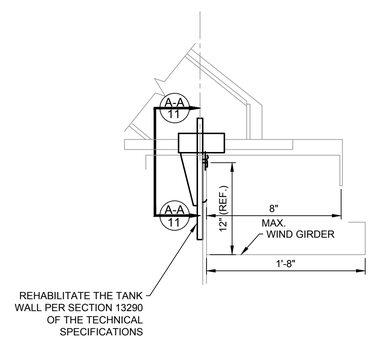

NEW STEEL SHOE SUPPORT DETAIL

NOT TO SCALE

N 8 11

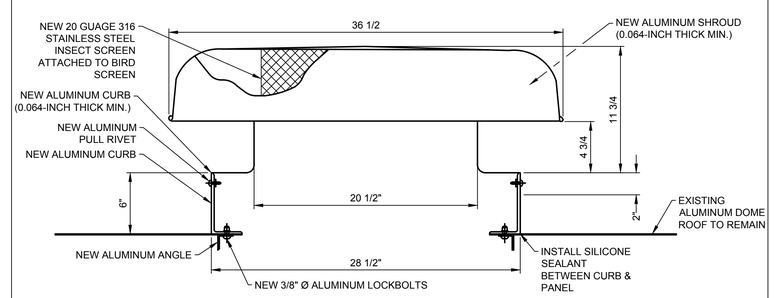

NEW VENT DETAIL

NOT TO SCALE

O 8 11

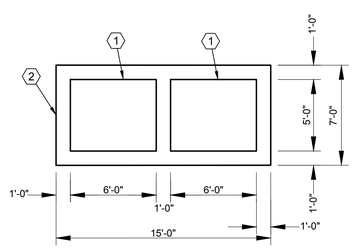

BLOWER SLAB DETAIL

NOT TO SCALE

Q 8 11

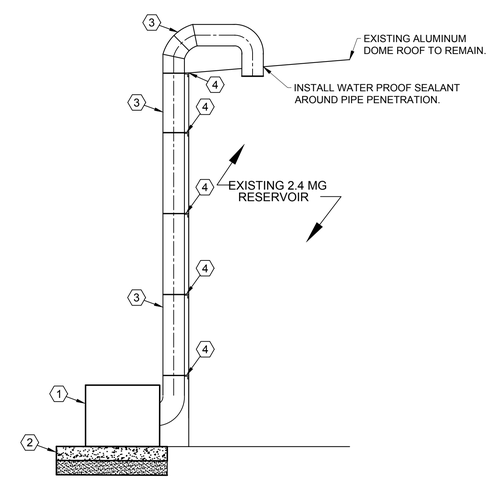

BLOWER PIPE SECTION

NOT TO SCALE

B-B 8 11

CONSTRUCTION KEYNOTES

1. INSTALL 5 HP, 3,000 CFM, TURBO BLOWER UNIT.
2. INSTALL 15'-0" X 7'-0" X 12-INCH THICK PCC PAD.THE SLAB SHALL BE PLACED OVER 12-INCHES OF CLASS 2 BASE COMPACTED TO 95% OF MAXIMUM DENSITY PER ASTM D-1557.
3. INSTALL 18-INCH 24 GAUGE GALVANIZED FLAT STK. DUCT PIPE.
4. INSTALL 1-1/2" X 1-1/2" ANGLE BAR GLUED TO SIDE OF TANK FOR DUCT SUPPORT PER SUBMITTAL 11.19

No.	REVISION	APPROVED	DATE

UNAUTHORIZED CHANGES AND USES: The engineer preparing these plans will not be responsible for, or liable for, unauthorized changes to or uses of these plans. All changes to these plans must be in writing and must be approved by the preparer of these plans.

DESIGNED BY: JL/JM | DRAWN BY: DB/JS
SCALE: | CHECKED BY: JM
BENCH MARK No. 2 | ELEV.: 986.02
MARKED "X" AT NORTHWEST CORNER OF POWER SERVICE TRANSFORMER SET PCC PAD LOCATED NEAR NORTHEAST CORNER OF EXISTING OPERATIONS BUILDING
ELEVATION = 986.02

PREPARED UNDER THE DIRECT SUPERVISION OF:

JESUS R. MARMOLEJO, P.E.
09/11/2020 DATE
80410 R.C.E. No.
03/31/2021 REG. EXP.

REGISTERED PROFESSIONAL ENGINEER JESUS R. MARMOLEJO No. 80410 Exp. 03-31-21 CIVIL STATE OF CALIFORNIA

The Holt Group, Inc.
ENGINEERING * SURVEYING * CONSTRUCTION MANAGEMENT * PLANNING
1601 N. IMPERIAL AVE. EL CENTRO, CA 92243 PHONE : (760) 337-3883 FAX : (760) 337-5997
201 E. HOBSONWAY BLYTHE, CA 92225 PHONE : (760) 922-4658 FAX : (760) 922-4660

PROJECT TITLE : CITY OF HOLTVILLE - WATER TREATMENT PLANT IMPROVEMENT PROJECT - 2017
PROJECT NUMBER : 116.455E
SHEET CONTENT : 2.4 MG TANK DETAILS 3

SHEET NO. 11 OF 46 SHEETS

EXISTING KEYNOTES

1. EXISTING 6-INCH DIAMETER PVC WATER PIPELINE.
2. EXISTING 12-INCH DIAMETER PVC BACKWASH WATER PIPELINE.
3. EXISTING 12-INCH DIAMETER CONCRETE STORM DRAIN PIPELINE.
4. EXISTING 12-INCH DIAMETER D.I. FLANGED RESILIENT WEDGE GATE VALVE.
5. EXISTING 16-INCH DIAMETER PVC RESERVOIR DRAIN PIPELINE.
6. EXISTING 16-INCH DIAMETER RESERVOIR OVERFLOW PIPELINE.
7. EXISTING 18-INCH DIAMETER PVC FILTERED WATER PIPELINE.
8. EXISTING 16-INCH DIAMETER D.I. RESERVOIR OUTLET PIPELINE.
9. EXISTING 18-INCH DIAMETER D.I. RESERVOIR OUTLET PIPELINE.
10. EXISTING 18-INCH DIAMETER D.I. FLANGED BUTTERFLY VALVE.
11. EXISTING 3/4-INCH DIAMETER PVC ELECTRICAL CONDUIT FOR GATE OPENER.
12. EXISTING 1-INCH DIAMETER PVC ELECTRICAL CONDUIT.
13. FOUR (4) 3/4-INCH DIAMETER PVC CHEMICAL PIPELINES.
14. FOUR (4) 3/4-INCH DIAMETER PVC CHEMICAL PIPELINES (ABANDONED).
15. EXISTING 1-INCH DIAMETER PVC CONDUIT.
16. EXISTING 1-1/2-INCH DIAMETER PVC WATER PIPELINE.
17. EXISTING 2-INCH DIAMETER PVC CONDUIT.
18. EXISTING SODIUM HYPOCHLORITE INJECTION CONCRETE VAULT.
19. EXISTING STORMWATER CATCH BASIN.
20. EXISTING SITE FENCE.
21. EXISTING TREE.
22. EXISTING ACCESS ROAD.
38. EXISTING 18-INCH DIAMETER C905 PVC FINISH WATER PIPELINE.
39. EXISTING 12-INCH DIAMETER AWWA C900 PVC BACKWASH WATER PIPELINE.
40. EXISTING 16-INCH DIAMETER AWWA C905 PVC DRAIN PIPELINE.
41. EXISTING 10-INCH DIAMETER C905 PVC OVERFLOW PIPELINE.
42. EXISTING 18-INCH DIAMETER CEMENT MORTAR LINED D.I. FLANGED OUTLET PIPELINE.
43. EXISTING RESERVOIR LEVEL TRANSMITTER CONNECTION ASSEMBLY.
44. EXISTING CONCRETE PAD FOR NEW RESERVOIR EXTERIOR LADDER.
47. EXISTING UV COOLING WATER PIPING CONNECTION.
50. EXISTING 2-INCH DIAMETER BLOWOFF ASSEMBLY.
53. EXISTING 4-INCH DIAMETER PIPE CLEANOUT.
55. EXISTING 1-INCH TYPE K COPPER SOFT U.V. COOLING WATER PIPELINE.
56. EXISTING RESERVOIR CHLORINE SAMPLING CONNECTION ASSEMBLY, RESIDUAL CHLORINE MONITOR AND ASSOCIATED ELECTRICAL, SIGNAL AND CHEMICAL MATERIAL.
57. EXISTING RESERVOIR GROUNDING COPPER WIRE CONNECTION.
58. EXISTING 1" DIAMETER PVC ELECTRICAL CONDUIT AND GROUNG COPPER WIRE CONNECTION.

CONSTRUCTION KEYNOTES

1. INSTALL NEW 18-INCH DIA. OUTLET PIPE CONNECTION PER DETAIL P ON PLAN SHEET 9.
2. INSTALL NEW 18-INCH DIA. CEMENT MORTAR LINED DUCTILE IRON CLASS 53 PIPE.
3. INSTALL 18-INCH DIA. AWWA C905 DR 25 PVC WATER PIPELINE.
4. INSTALL 18-INCH DIA. DI FL x FL BUTTERFLY VALVE WITH HANDWHEEL OPERATOR AND 316 S.S. HARDWARE.
5. INSTALL 18-INCH DIA. CEMENT MORTAR LINED DI FL x FL 22.5 DEGREE ELBOW WITH 316 S.S. HARDWARE.
6. INSTALL 18-INCH DIA. CEMENT MORTAR LINED DI FL x FL 45 DEGREE ELBOW WITH 316 S.S. HARDWARE.
7. INSTALL 18-INCH DIA. CEMENT MORTAR LINED DI FL x FL 90 DEGREE ELBOW WITH 316 S.S. HARDWARE.
8. INSTALL 18" x 18" x 18" DI FLANGED TEE WITH 316 S.S. HARDWARE.
9. INSTALL PIPE SUPPORTS PER DETAIL Q ON PLAN SHEET 13. MAXIMUM DISTANCE BETWEEN SPAN SUPPORTS SHALL BE 13 FEET. PIPE SUPPORTS SHALL BE PLACED A MAXIMUM OF 3' FROM PIPELINE BENDS.
10. INSTALL NEW FLANGE WITH IDENTICAL DIMENSIONS, BOLT PATTERNS, TO ALIGN WITH NEW PIPING CONNECTION.
11. LEFT BLANK INTENTIONALLY.
12. RELOCATE THE EXISTING 18-INCH DIA. FLANGED MAGNETIC FLOW METER TO THE LOCATION SHOWN.
13. INSTALL A NEW EXTERIOR AND INTERIOR STEEL (A36) REINFORCING PLATE OVER THE EXISTING OUTLET. THE REINFORCING PLATE SHALL BE A MINIMUM 0.5" THICK, 3'-9 3/4" X 3'-1 1/2".
14. INSTALL A 2-INCH BLOWOFF/SAMPLING POINT ASSEMBLY PER DETAIL R ON PLAN SHEET 13.
15. INSTALL AN 18-INCH BUTTERFLY VALVE ASSEMBLY PER DETAIL S ON PLAN SHEET 13.
16. THE EXISTING INLET PIPE SHALL BE MODIFIED PER DETAIL G ON PLAN SHEET 10.
17. INSTALL 20-FOOT ROLL GATE PER THE SPECIAL CONDITIONS AND FENCING DETAILS ON PLAN SHEET 17.
18. REHABILITATE EXISTING 12-INCH DIAMETER OVERFLOW PIPELINE PER DETAIL H ON PLAN SHEET 10.
19. RE-INSTALL THE TEMPORARILY STORED PIPE SUPPORT AT THE LOCATION SHOWN. INSTALL PIPE SUPPORT PER DETAIL Q ON PLAN SHEET 13.

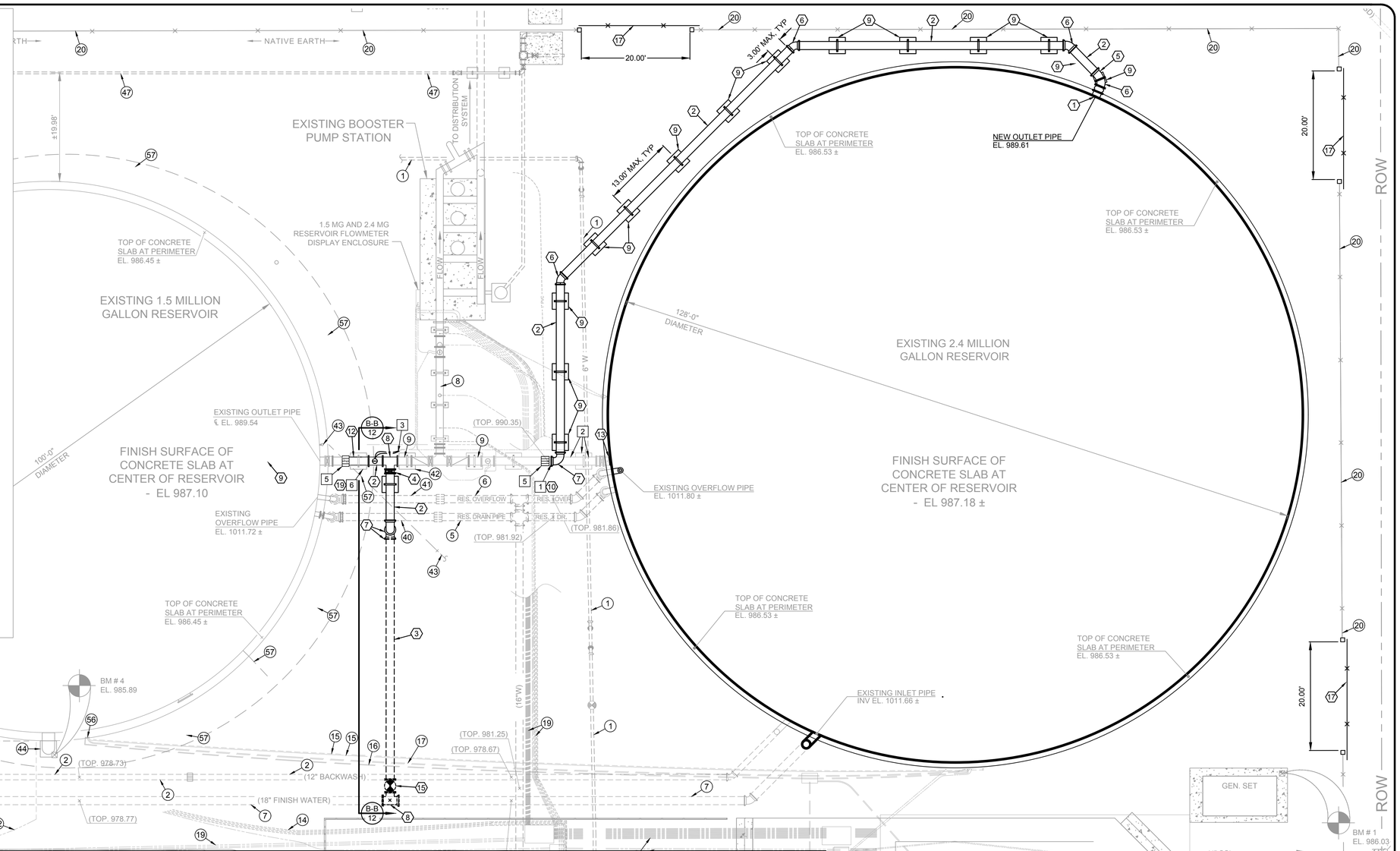

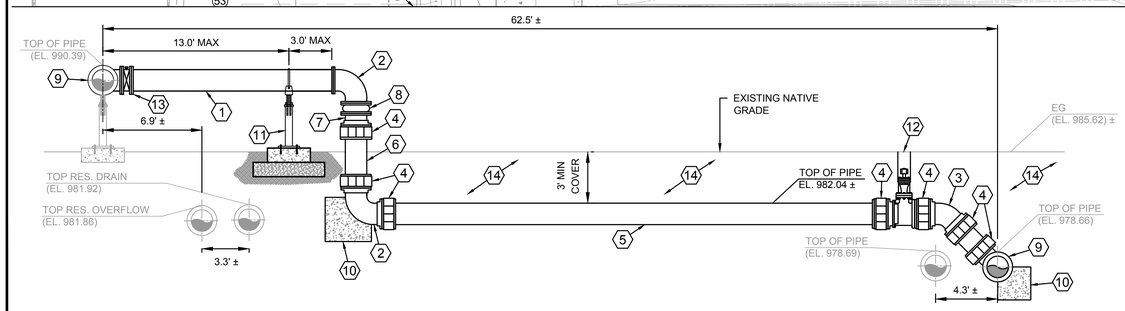

18-INCH DIAMETER SERIES PIPE CONNECTION (B-B / 12)

SCALE: 1" = 5'

CONSTRUCTION KEYNOTES

1. INSTALL NEW 18-INCH DIA. CEMENT MORTAR LINED DI CLASS 53 PIPE.
2. INSTALL 18-INCH DIA. DI 90 DEGREE MECHANICAL JOINT ELBOW WITH 316 S.S. HARDWARE.
3. INSTALL 18-INCH DIA. DI 45 DEGREE MECHANICAL JOINT ELBOW WITH 316 S.S. HARDWARE.
4. INSTALL NEW 18-INCH DIA. RESTRAINED JOINT FITTING WITH 316 S.S. HARDWARE.
5. INSTALL NEW 18-INCH DIA. DI AWWA C905 DR 25 PVC WATER PIPELINE.
6. INSTALL NEW 18-INCH DIA. DI AWWA C905 DR 25 PVC WATER PIPELINE. THE PIPELINE PORTION EXTENDING ABOVE GRADE SHALL BE COATED WITH THE RESERVOIR TOP COAT.
7. INSTALL NEW 18-INCH DIA. DI FLANGE COUPLING ADAPTER WITH S.S. HARDWARE.
8. INSTALL NEW 18-INCH DIA. FLANGED RUBBER DI EXPANSION/FLEXIBLE JOINT FITTING WITH 316 S.S HARDWARE.
9. INSTALL 18" X 18" X 18" DI FLANGED TEE WITH 316 S.S. HARDWARE.
10. INSTALL P.C.C. THRUST BLOCK PER DETAIL T ON PLAN SHEET 13.
11. INSTALL PIPE SUPPORT PER DETAIL Q ON PLAN SHEET 13.
12. INSTALL AN 18-INCH BUTTERFLY VALVE ASSEMBLY PER DETAIL S ON PLAN SHEET 13.
13. INSTALL 18-INCH DIA. DI FL x FL BUTTERFLY VALVE WITH HANDWHEEL OPERATOR AND 316 S.S. HARDWARE.
14. INSTALL PVC PIPELINE PER PIPE TRENCH DETAIL U ON PLAN SHEET 13.

SCALE: 1" = 10'

No.	REVISION	APPROVED	DATE

UNAUTHORIZED CHANGES AND USES: The engineer preparing these plans will not be responsible for, or liable for, unauthorized changes to or uses of these plans. All changes to these plans must be in writing and must be approved by the preparer of these plans.

DESIGNED BY: JL/JM | DRAWN BY: DB/JS
SCALE: | CHECKED BY: JM
BENCH MARK No. 2 | ELEV.: 986.02
MARKED "X" AT NORTHWEST CORNER OF POWER SERVICE TRANSFORMER SET PCC PAD LOCATED NEAR NORTHEAST CORNER OF EXISTING OPERATIONS BUILDING
ELEVATION = 986.02

PREPARED UNDER THE DIRECT SUPERVISION OF:

JESUS R. MARMOLEJO, P.E. — 80410 R.C.E. No.
09/11/2020 DATE — 03/31/2021 REG. EXP.

REGISTERED PROFESSIONAL ENGINEER — JESUS R. MARMOLEJO — No. 80410 — Exp. 03-31-21 — CIVIL — STATE OF CALIFORNIA

The Holt Group, Inc.
ENGINEERING * SURVEYING * CONSTRUCTION MANAGEMENT * PLANNING
1601 N. IMPERIAL AVE. EL CENTRO, CA 92243 PHONE: (760) 337-3883 FAX: (760) 337-5997
201 E. HOBSONWAY BLYTHE, CA 92225 PHONE: (760) 922-4658 FAX: (760) 922-4660

PROJECT TITLE : CITY OF HOLTVILLE - WATER TREATMENT PLANT IMPROVEMENT PROJECT - 2017

PROJECT NUMBER : 116.455E

SHEET CONTENT : FINISH WATER PIPING PLAN AND SECTIONS

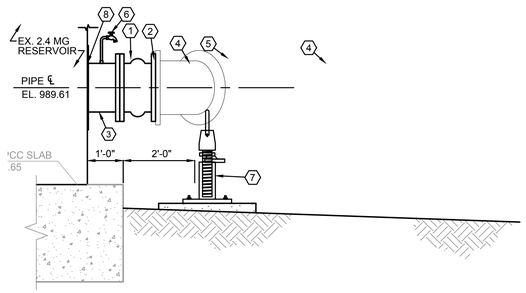

CONSTRUCTION KEYNOTES

1. INSTALL NEW 18-INCH DIAMETER EPOXY COATED D.I. FLANGED BUTTERFLY VALVE WITH HANDWHEEL OPERATOR AND STAINLESS STEEL HARDWARE.
2. INSTALL SALVAGED 18-INCH DIAMETER FLANGED RUBBER EXPANSION/FLEXIBLE JOINT FROM OLD OUTLET AS DESCRIBED IN KEYNOTE 13 ON PLAN SHEET 8 AND DETAIL J ON PLAN SHEET 6.
3. NEW 18-INCH DIAMETER STEEL OUTLET PIPELINE WITH 1-INCH DIAMETER THREADED COUPLING.
4. INSTALL NEW 18-INCH DIAMETER CEMENT MORTAR LINED DUCTILE IRON CLASS 53 FLANGED X PLAIN END PIPE SECTION.
5. INSTALL NEW 18-INCH DIAMETER EPOXY COATED TRANSITION COUPLING ADAPTER WITH STAINLESS STEEL HARDWARE.
6. INSTALL NEW 3/4-INCH DIAMETER STAINLESS STEEL SAMPLING PIPE AND HOSE BIB.
7. INSTALL NEW PIPE SUPPORT PER DETAIL Q ON SHEET 9.
8. INSTALL A NEW EXTERIOR STEEL (A36) REINFORCING PLATE FOR THE NEW OUTLET. THE REINFORCING PLATE SHALL BE A MINIMUM 0.5" THICK, 3'-9 3/4" X 3'-1 1/2".

OUTLET PIPE CONNECTION DETAIL

NOT TO SCALE

P 8,12 13

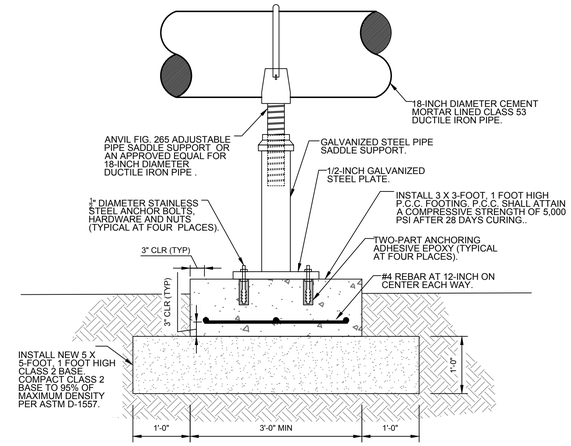

18-INCH ADJUSTABLE PIPE SADDLE SUPPORT DETAIL

NOT TO SCALE

Q 12 13

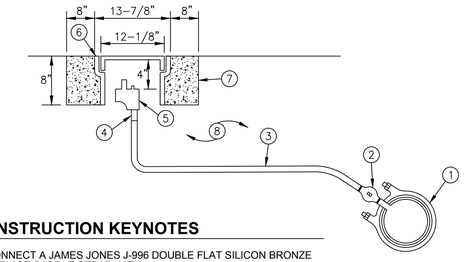

CONSTRUCTION KEYNOTES

1. CONNECT A JAMES JONES J-996 DOUBLE FLAT SILICON BRONZE SERVICE SADDLE STRAP WITH BRONZE NUTS TO THE WATER MAIN.
2. INSTALL A 2 INCH JAMES JONES J-1935SG OR MUELLER H15203 BRONZE CORPORATION STOP.
3. INSTALL A 2 INCH DIAMETER TYPE K COPPER WATER SERVICE PIPELINE.
4. INSTALL A BRASS COMPRESSION FITTING FROM THE 2 INCH TYPE K COPPER PIPELINE TO THE BLOWOFF FITTING. THE FITTING SHALL BE A JAMES JONES J-2605SG OR MUELLER H15428.
5. INSTALL A 2 INCH TRUFLO MODEL TF550 BRASS BLOWOFF FITTING AS MANUFACTURED BY THE KUPFERLE FOUNDRY COMPANY.
6. INSTALL A SOUTH BAY FOUNDRY MODEL NUMBER SBF 1240 DUCTILE IRON FRAME AND COVER TO THE FINISH SURFACE GRADE.
7. INSTALL AN 8 INCH WIDE, 8 INCH DEEP PCC CONCENTRIC RING AROUND THE DUCTILE IRON FRAME AND COVER. THE DUCTILE IRON COVER SHALL BE MARKED "WATER".
8. BACKFILL THE PIPELINE WITH GRANULAR SAND BACKFILL WITH A SAND EQUIVALENT OF 30 OR GREATER. COMPACT THE GRANULAR SAND BACKFILL TO 95 PERCENT OF MAXIMUM DENSITY PER ASTM D 1557.

2" BLOWOFF/SAMPLING POINT ASSEMBLY DETAIL

NOT TO SCALE

R 12 13

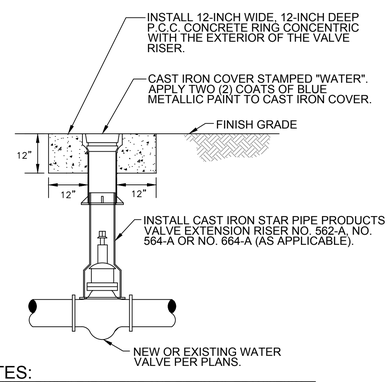

NOTES:

ALL BURIED DUCTILE IRON PIPE AND FITTINGS, TRANSITION COUPLINGS, MECHANICAL RESTRAINED JOINT FITTINGS AND COUPLING ADAPTERS SHALL BE WRAPPED WITH 10 MIL (MIN.) POLYETHYLENE PLASTIC WRAP MEETING OR EXCEEDING THE REQUIRMENTS OF AWWA C105.

VALVE RISER AND CONCRETE RING DETAIL

NOT TO SCALE

S 12 13

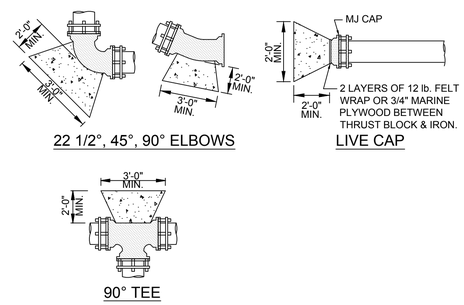

NOTES:

1. PIPE FITTINGS SHALL BE WRAPPED WITH A 10 MIL. POLYETHYLENE PLASTIC SHEETING MATERIAL BEFORE CONCRETE PLACEMENT OR BURIAL.
2. THE CONCRETE THRUST BLOCK IS TO BE CAST IN SUCH A MANNER AS TO CRADLE THE FITTING. CONCRETE ENCASEMENT SHALL BE PERPENDICULAR TO THE LINE OF THRUST. CONCRETE SHALL NOT CONTACT THE PIPE.
3. ALL FITTING HARDWARE SHALL REMAIN EXPOSED AFTER THE CONCRETE THRUST BLOCK PLACEMENT TO ALLOW FREE ACCESS FOR REMOVAL AND REPLACEMENT OF THE HARDWARE AS REQUIRED.
4. CONCRETE SHALL CONTAIN 7 SACKS OF CEMENT PER CUBIC YARD AND ATTAIN A COMPRESSIVE STRENGTH OF 4,500 PSI AFTER 28 DAYS CURING.

THRUST BLOCK DETAILS

NOT TO SCALE

T 12 13

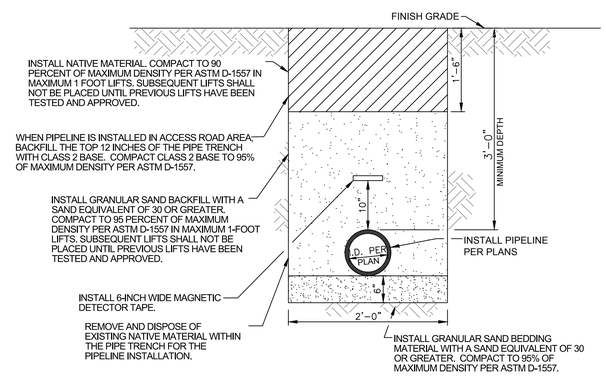

PIPE TRENCH DETAIL

NOT TO SCALE

U 12 13

No.	REVISION	APPROVED	DATE

UNAUTHORIZED CHANGES AND USES: The engineer preparing these plans will not be responsible for, or liable for, unauthorized changes to or uses of these plans. All changes to these plans must be in writing and must be approved by the preparer of these plans.

DESIGNED BY: JL/JM	DRAWN BY: DB/JS
SCALE:	CHECKED BY: JM
BENCH MARK No. 2	ELEV.: 986.02

MARKED "X" AT NORTHWEST CORNER OF POWER SERVICE TRANSFORMER SET PCC PAD LOCATED NEAR NORTHEAST CORNER OF EXISTING OPERATIONS BUILDING
ELEVATION = 986.02

PREPARED UNDER THE DIRECT SUPERVISION OF:

JESUS R. MARMOLEJO, P.E. — 80410 R.C.E. No.

09/11/2020 DATE — 03/31/2021 REG. EXP.

REGISTERED PROFESSIONAL ENGINEER JESUS R. MARMOLEJO No. 80410 Exp. 03-31-21 CIVIL STATE OF CALIFORNIA

The Holt Group, Inc.
ENGINEERING * SURVEYING * CONSTRUCTION MANAGEMENT * PLANNING
1601 N. IMPERIAL AVE. EL CENTRO, CA 92243 PHONE: (760) 337-3883 FAX: (760) 337-5997
201 E. HOBSONWAY BLYTHE, CA 92225 PHONE: (760) 922-4658 FAX: (760) 922-4660

PROJECT TITLE : CITY OF HOLTVILLE - WATER TREATMENT PLANT IMPROVEMENT PROJECT - 2017

PROJECT NUMBER : 116.455E

SHEET CONTENT : FINISH WATER PIPING DETAILS

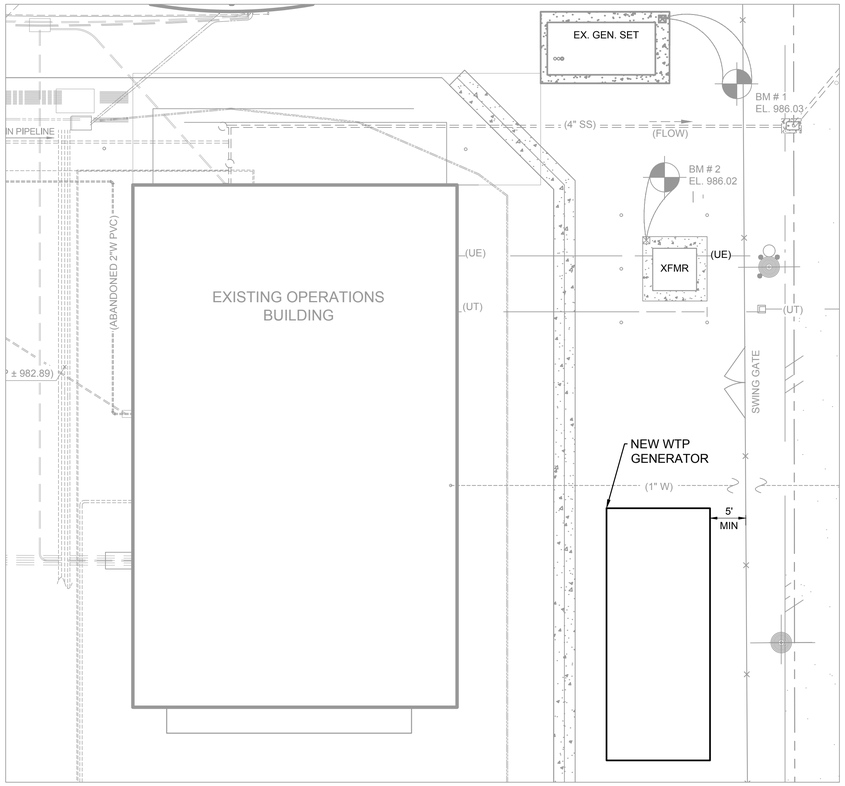

WTP GENERATOR - NEW SITE PLAN

SCALE: 1" = 10'

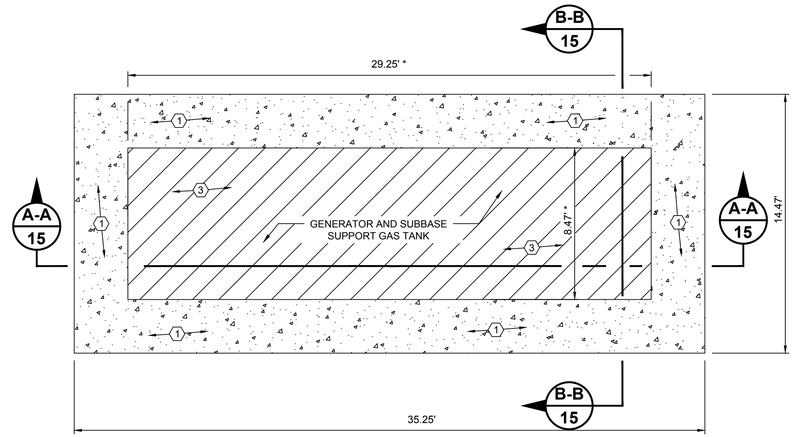

EMERGENCY GENERATOR SET PLAN

SCALE: 1/4"=1'-0"

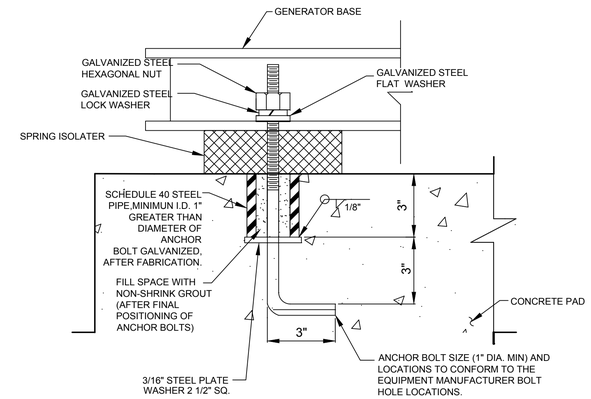

TYPICAL EQUIPMENT BASE ANCHOR BOLT DETAIL (A / 15)

NOT TO SCALE

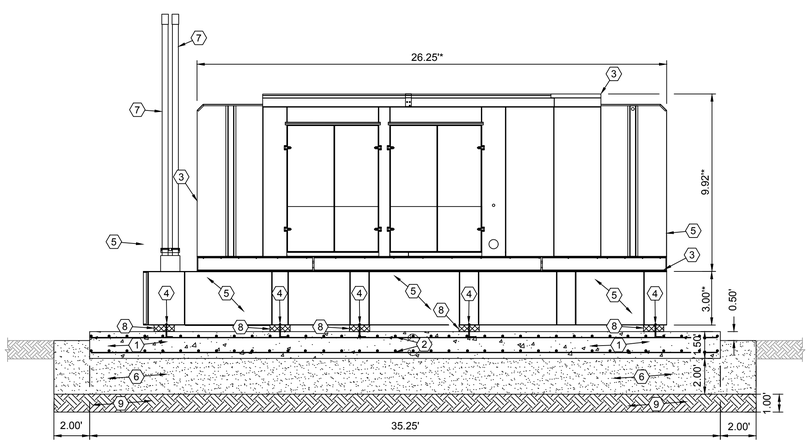

EMERGENCY GENERATOR P.C.C. PAD SECTION (A-A / 15)

SCALE: 1/4"=1'-0"

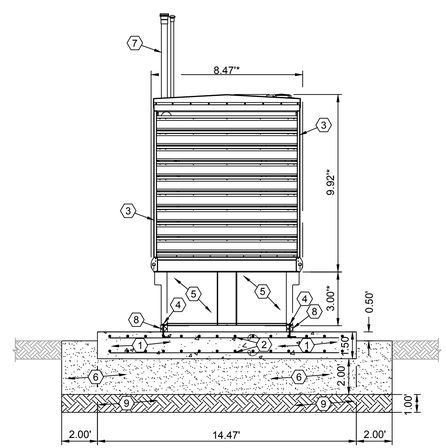

EMERGENCY GENERATOR P.C.C. PAD SECTION (B-B / 15)

SCALE: 1/4"=1'-0"

CONSTRUCTION KEYNOTES:

1. CONSTRUCT A P.C.C. SUPPORT PAD FOR THE EMERGENCY POWER GENERATOR SET. THE PAD DIMENSIONS SHALL BE AS ILLUSTRATED ON THE PLANS. CONCRETE AND REINFORCING STEEL SHALL BE IN ACCORDANCE WITH THE SPECIFICATIONS.
2. INSTALL NUMBER 4 REINFORCING BARS 1'-0" ON-CENTER EACH WAY.
3. INSTALL A 750 KW EMERGENCY POWER GENERATOR SET WITH A SOUND ATTENUATED, WEATHERPROOF PROTECTIVE ENCLOSURE PER THE TECHNICAL SPECIFICATIONS .A VIBRATION ISOLATION SYSTEM SHALL BE PLACED BETWEEN THE EMERGENCY POWER GENERATOR SET AND THE SKID MOUNT SUPPORT FRAME/GAS TANK. GENERATOR MUST BE COMPLIANT WITH THE IMPERIAL COUNTY AIR POLLUTION CONTROL DISTRICT RULES AND REGULATIONS. THE CONTRACTOR WILL BE RESPONSIBLE TO SUPPLY THE FIRST 1000 GALLONS OF DIESEL.
4. CONTRACTOR TO VERIFY THE LOCATION OF THE ANCHOR BOLTS WITH THE APPROVED SUBMITTAL DRAWINGS OF THE EMERGENCY POWER GENERATOR SET. ANCHOR BOLTS TO BE INSTALLED PER DETAIL B ON THIS SHEET.
5. INSTALL A DOUBLE WALL DIESEL FUEL BASE TANK. THE FUEL BASE TANK SHALL CONFORM TO UL 142, NFPA 37 AND ELECTRICAL SPECIFICATIONS.
6. INSTALL 2-FOOT OF AGGREGATE BASE. COMPACT AGGREGATE BASE TO 95 PERCENT OF MAXIMUM DENSITY PER ASTM D-1557. INSTALL AGGREGATE BASE IN MAXIMUM 8 INCH LIFTS. ADDITIONAL LIFTS SHALL NOT BE ADDED UNTIL PREVIOUS LIFTS HAVE ATTAINED THE COMPACTION SPECIFIED.
7. INSTALL 4-INCH DIAMETER VENT EXTENSION PIPE PER MANUFACTURERS RECOMMENDATIONS.
8. INSTALL SPRING VIBRATION ISOLATOR BETWEEN THE PCC SUPPORT PAD AND THE SKID MOUNT SUPPORT FRAME/GAS TANK PER MANUFACTURERS RECOMMENDATIONS. SECURE THE SPRING ISOLATOR TO THE PCC SUPPORT PAD PER DETAIL B ON THIS SHEET.
9. EXPOSE SUBGRADE AND SCARIFY TO A DEPTH OF 12-INCHES MINIMUM. MOISTURE CONDITION NATIVE MATERIAL TO 2% TO 3% ABOVE OPTIMUM MOISTURE CONTENT AND RE COMPACT TO 90% OF MAXIMUM DENSITY PER ASTM D-1557 IN MAXIMUM 6-INCH LIFTS.

* THE EXACT CONFIGURATION AND DIMENSIONS OF THE MECHANICAL/ELECTRICAL SYSTEM IS DEPENDENT UPON THE EMERGENCY POWER GENERATOR MANUFACTURER. THE EXACT CONFIGURATION OF THE MECHANICAL/ELECTRICAL SYSTEM SHALL BE DETERMINED DURING THE SHOP DRAWING PROCESS.

NOTE: SEE ELECTRICAL DRAWINGS FOR ELECTRICAL AND CONTROL WIRING AND CONDUIT INSTALLATION.

No.	REVISION	APPROVED	DATE

UNAUTHORIZED CHANGES AND USES: The engineer preparing these plans will not be responsible for, or liable for, unauthorized changes to or uses of these plans. All changes to these plans must be in writing and must be approved by the preparer of these plans.

DESIGNED BY: JL/JM	DRAWN BY: DB/JS
SCALE:	CHECKED BY: JM
BENCH MARK No. 2	ELEV.: 986.02

MARKED "X" AT NORTHWEST CORNER OF POWER SERVICE TRANSFORMER SET PCC PAD LOCATED NEAR NORTHEAST CORNER OF EXISTING OPERATIONS BUILDING
ELEVATION = 986.02

PREPARED UNDER THE DIRECT SUPERVISION OF:

JESUS R. MARMOLEJO, P.E. — 80410 **R.C.E. No.**

09/11/2020 **DATE** — 03/31/2021 **REG. EXP.**

REGISTERED PROFESSIONAL ENGINEER — JESUS R. MARMOLEJO — No. 80410 — Exp. 03-31-21 — CIVIL — STATE OF CALIFORNIA

The Holt Group, Inc.

ENGINEERING * SURVEYING * CONSTRUCTION MANAGEMENT * PLANNING

1601 N. IMPERIAL AVE.
EL CENTRO, CA 92243
PHONE : (760) 337-3883
FAX : (760) 337-5997

201 E. HOBSONWAY
BLYTHE, CA 92225
PHONE : (760) 922-4658
FAX : (760) 922-4660

PROJECT TITLE : CITY OF HOLTVILLE - WATER TREATMENT PLANT IMPROVEMENT PROJECT - 2017

PROJECT NUMBER : 116.455E

SHEET CONTENT : WTP EMERGENCY GENERATOR

SHEET NO. 15 OF 46 SHEETS

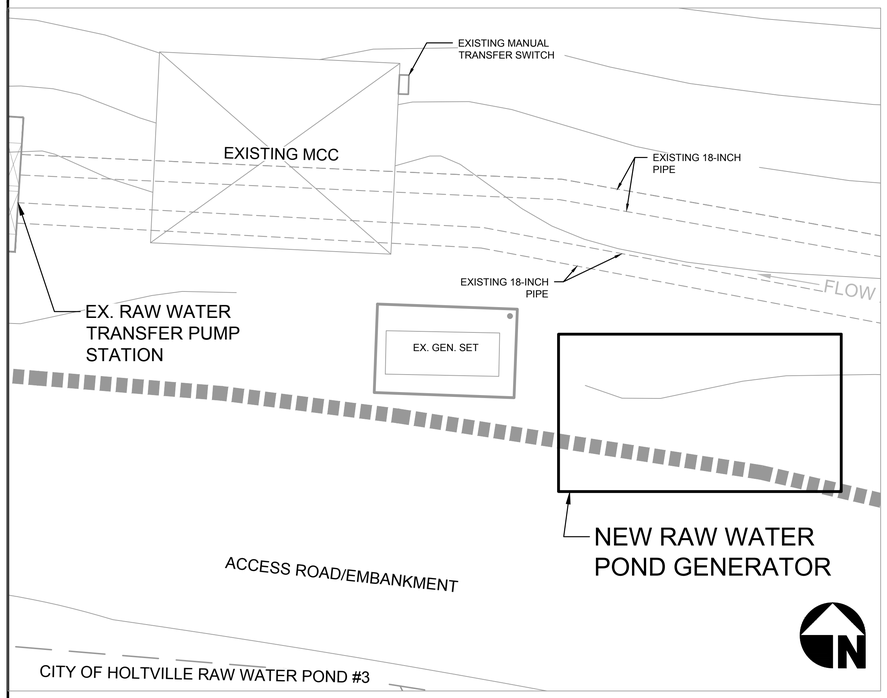

WATER POND GENERATOR - NEW SITE PLAN
SCALE: 1" = 5'

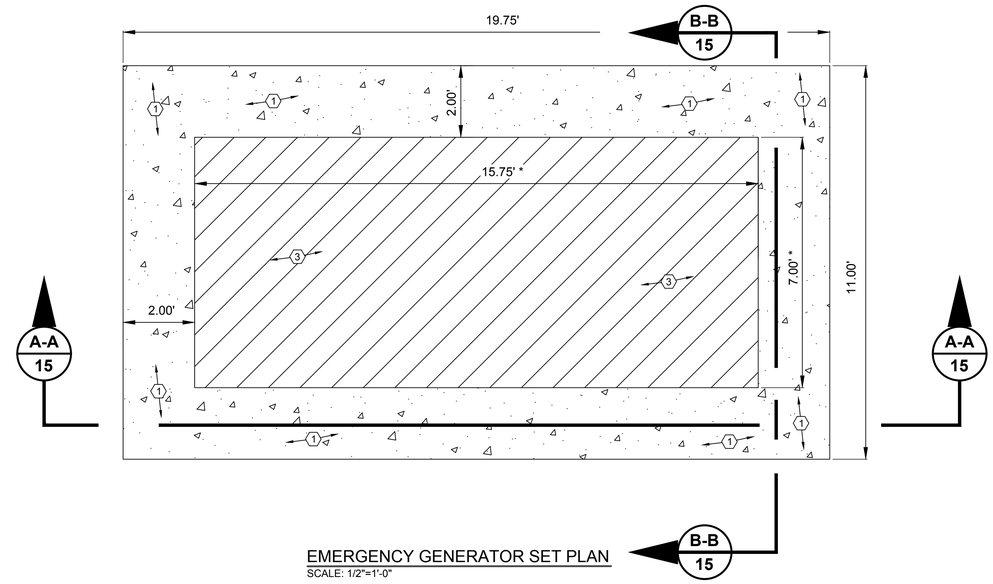

EMERGENCY GENERATOR SET PLAN
SCALE: 1/2"=1'-0"

CONSTRUCTION KEYNOTES:

1. CONSTRUCT A P.C.C. SUPPORT PAD FOR THE EMERGENCY POWER GENERATOR SET. THE PAD DIMENSIONS SHALL BE AS ILLUSTRATED ON THE PLANS. CONCRETE AND REINFORCING STEEL SHALL BE IN ACCORDANCE WITH THE SPECIFICATIONS.
2. INSTALL NUMBER 4 REINFORCING BARS 1'-0" ON-CENTER EACH WAY.
3. INSTALL A 70KW PORTABLE EMERGENCY POWER GENERATOR SET WITH A SOUND ATTENUATED, WEATHERPROOF PROTECTIVE ENCLOSURE PER THE TECHNICAL SPECIFICATIONS. GENERATOR MUST BE COMPLIANT WITH THE IMPERIAL COUNTY AIR POLLUTION CONTROL DISTRICT RULES AND REGULATIONS. THE CONTRACTOR WILL BE RESPONSIBLE TO SUPPLY THE FIRST 1000 GALLONS OF DIESEL.
4. INSTALL 2-FOOT OF AGGREGATE BASE. COMPACT AGGREGATE BASE TO 95 PERCENT OF MAXIMUM DENSITY PER ASTM D-1557. INSTALL AGGREGATE BASE IN MAXIMUM 8 INCH LIFTS. ADDITIONAL LIFTS SHALL NOT BE ADDED UNTIL PREVIOUS LIFTS HAVE ATTAINED THE COMPACTION SPECIFIED.
5. EXPOSE SUBGRADE AND SCARIFY TO A DEPTH OF 12-INCHES MINIMUM. MOISTURE CONDITION NATIVE MATERIAL TO 2% TO 3% ABOVE OPTIMUM MOISTURE CONTENT AND RE COMPACT TO 90% OF MAXIMUM DENSITY PER ASTM D-1557 IN MAXIMUM 6-INCH LIFTS.

* THE EXACT CONFIGURATION AND DIMENSIONS OF THE MECHANICAL/ELECTRICAL SYSTEM IS DEPENDENT UPON THE EMERGENCY POWER GENERATOR MANUFACTURER. THE EXACT CONFIGURATION OF THE MECHANICAL/ELECTRICAL SYSTEM SHALL BE DETERMINED DURING THE SHOP DRAWING PROCESS.

NOTE: SEE ELECTRICAL DRAWINGS FOR ELECTRICAL AND CONTROL WIRING AND CONDUIT INSTALLATION.

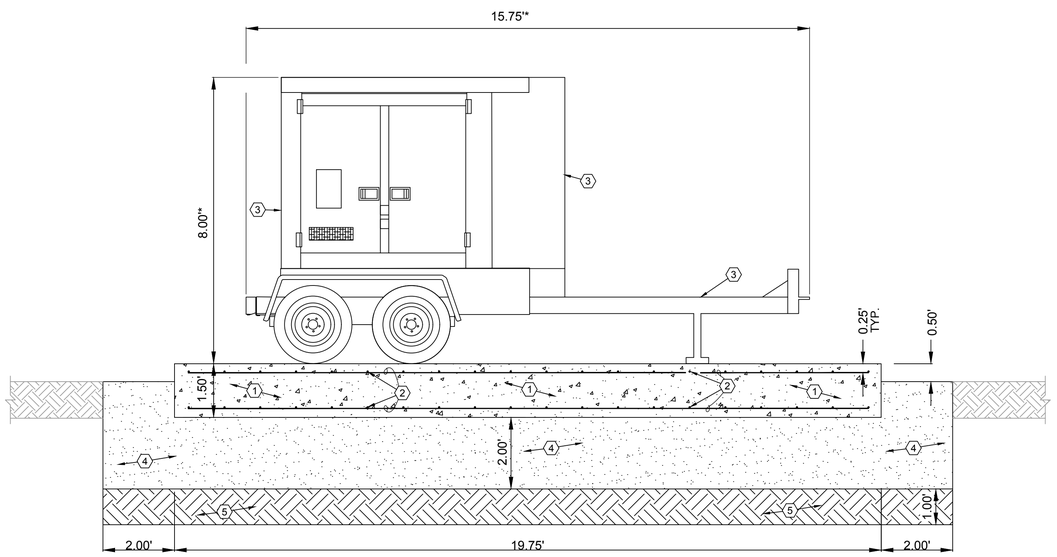

EMERGENCY GENERATOR P.C.C. PAD SECTION (A-A / 15)
SCALE: 1/2"=1'-0"

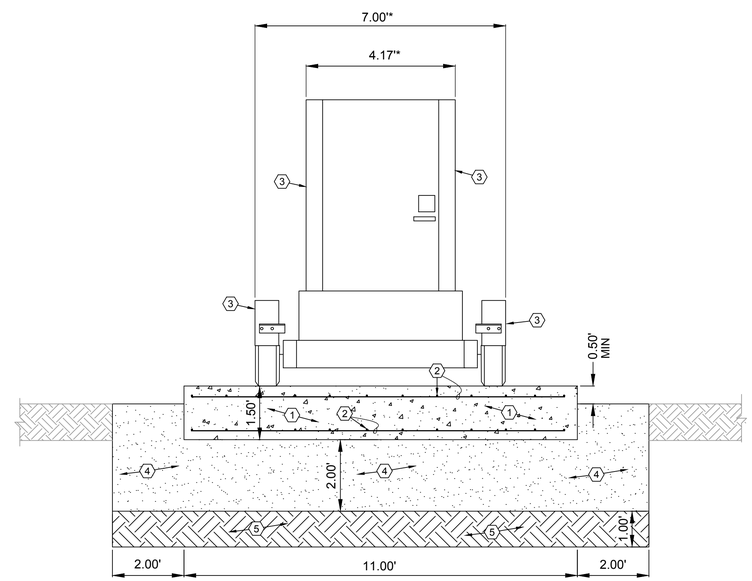

EMERGENCY GENERATOR P.C.C. PAD SECTION (B-B / 15)
SCALE: 1/2"=1'-0"

No.	REVISION	APPROVED	DATE

UNAUTHORIZED CHANGES AND USES: The engineer preparing these plans will not be responsible for, or liable for, unauthorized changes to or uses of these plans. All changes to these plans must be in writing and must be approved by the preparer of these plans.

DESIGNED BY: JL/JM	DRAWN BY: DB/JS
SCALE:	CHECKED BY: JM
BENCH MARK No. 2	ELEV.: 986.02

MARKED "X" AT NORTHWEST CORNER OF POWER SERVICE TRANSFORMER SET PCC PAD LOCATED NEAR NORTHEAST CORNER OF EXISTING OPERATIONS BUILDING
ELEVATION = 986.02

PREPARED UNDER THE DIRECT SUPERVISION OF:

JESUS R. MARMOLEJO, P.E.
09/11/2020
DATE

80410
R.C.E. No.
03/31/2021
REG. EXP.

REGISTERED PROFESSIONAL ENGINEER JESUS R. MARMOLEJO No. 80410 Exp. 03-31-21 CIVIL STATE OF CALIFORNIA

The Holt Group, Inc.
ENGINEERING * SURVEYING * CONSTRUCTION MANAGEMENT * PLANNING
1601 N. IMPERIAL AVE. EL CENTRO, CA 92243 PHONE : (760) 337-3883 FAX : (760) 337-5997
201 E. HOBSONWAY BLYTHE, CA 92225 PHONE : (760) 922-4658 FAX : (760) 922-4660

PROJECT TITLE : CITY OF HOLTVILLE - WATER TREATMENT PLANT IMPROVEMENT PROJECT - 2017

PROJECT NUMBER : 116.455E

SHEET CONTENT : EMERGENCY RAW WATER PONDS GENERATOR

SHEET NO. 16 OF 46 SHEETS

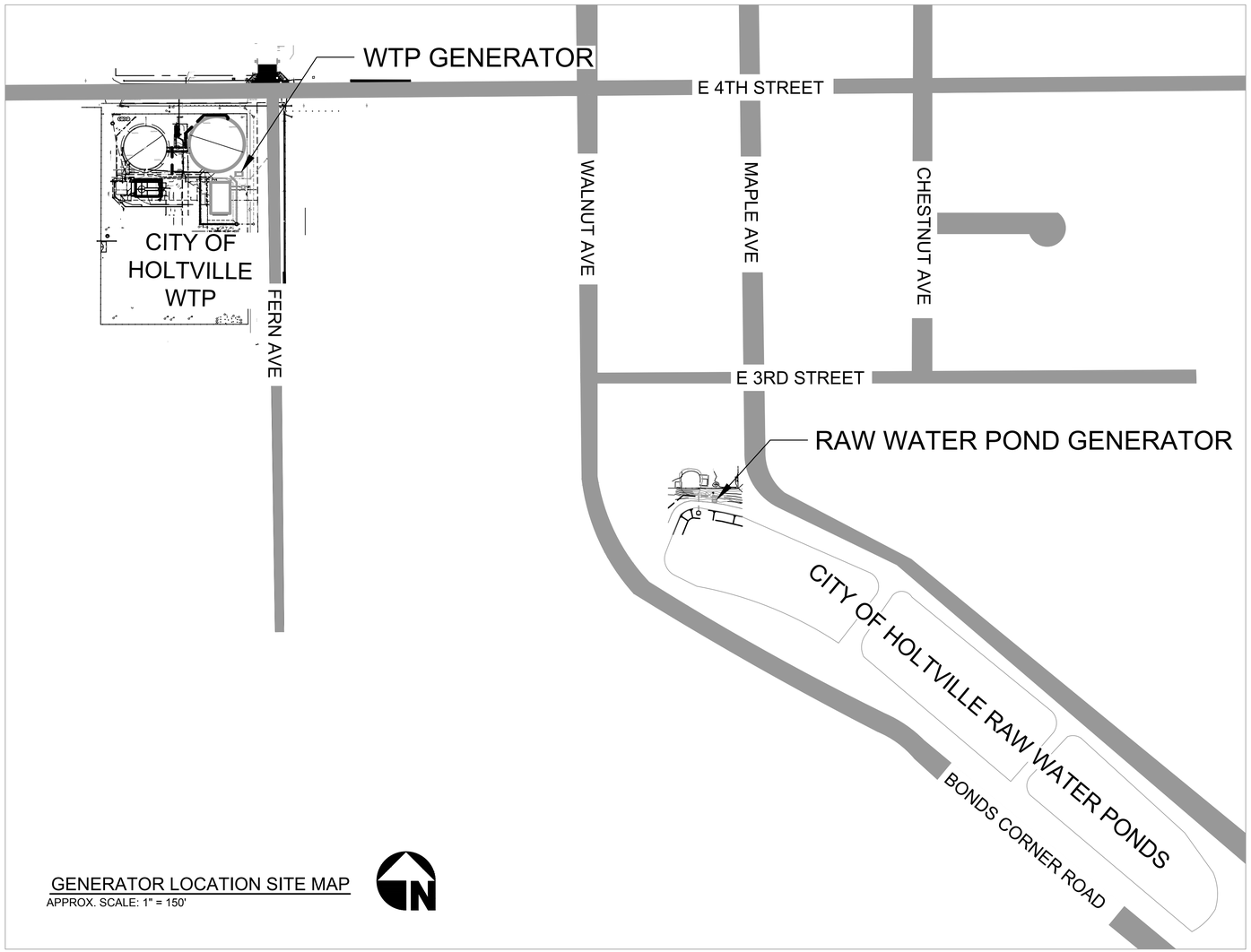

GENERATOR LOCATION SITE MAP
APPROX. SCALE: 1" = 150'

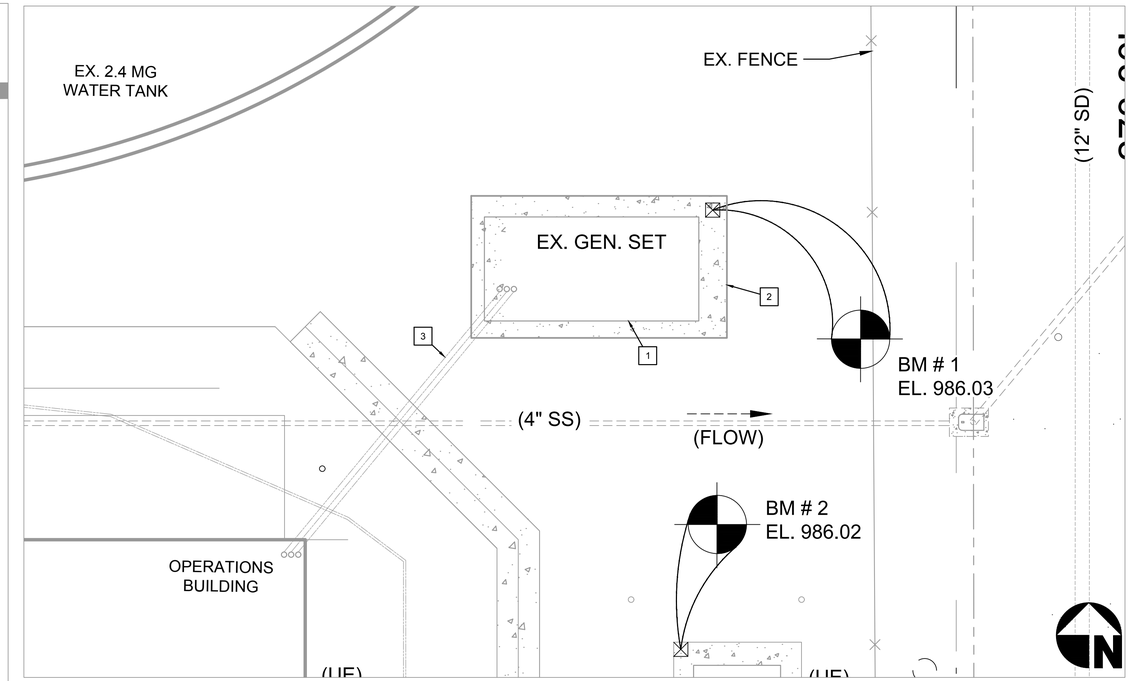

WTP GENERATOR - EXISTING/DEMO SITE PLAN
SCALE: 1" = 5'

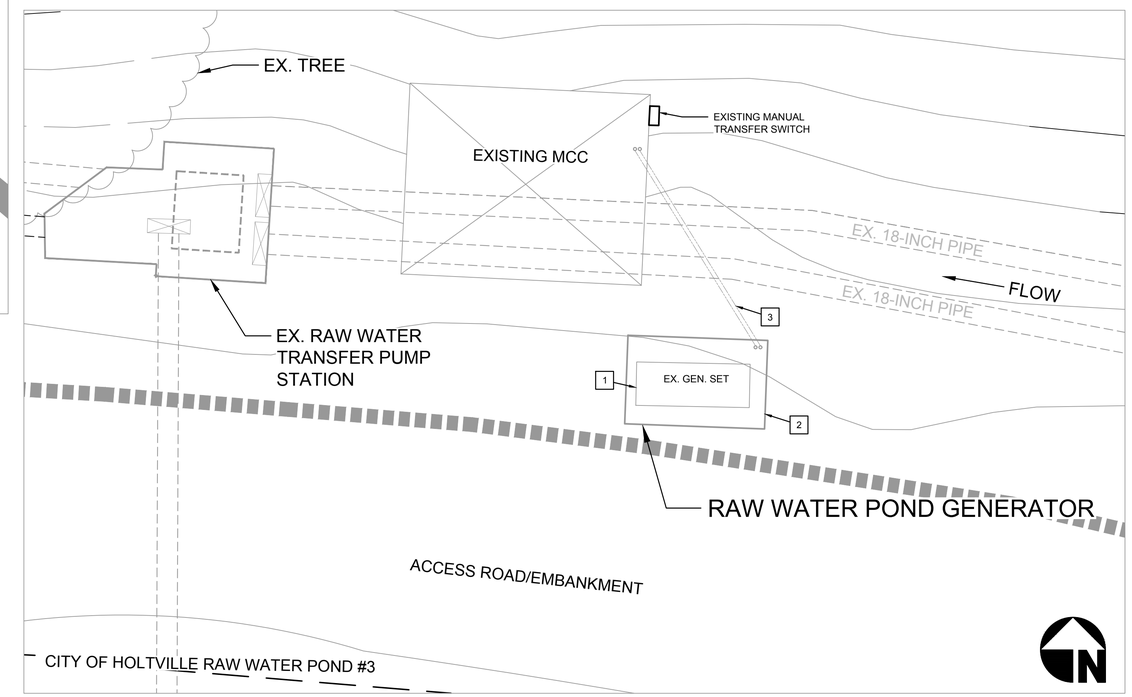

WATER POND GENERATOR - EXISTING/DEMO SITE PLAN
SCALE: 1" = 5'

EXISTING/DEMOLITION KEYNOTES

1. REMOVE THE EXISTING 600 KW STATIONARY DIESEL GENERATOR AND RELOCATE TO A DESIGNATED AREA WITHIN THE CITY OF HOLTVILLE WATER TREATMENT PLANT AS DIRECTED BY THE WATERWORKS SUPERVISOR. EXISTING GENERATOR TO REMAIN OPERATIONAL UNTIL NEW GENERATOR IS INSTALLED AND OPERATIONAL.
2. REMOVE AND DISPOSE OF THE EXISTING CONCRETE GENERATOR PCC PAD. BACKFILL, COMPACT, AND GRADE THE VOID RESULTING FROM PCC PAD REMOVAL WITH AGGREGATE BASE TO ADJACENT NATIVE SURFACE ELEVATION. COMPACT AGGREGATE BASE TO 90% MAXIMUM DENSITY PER ASTM D-1557.
3. EXISTING ELECTRICAL CONDUIT TO BE ABANDONED IN PLACE. CONDUIT TO BE CAPPED AT BOTH ENDS.

No.	REVISION	APPROVED	DATE

UNAUTHORIZED CHANGES AND USES: The engineer preparing these plans will not be responsible for, or liable for, unauthorized changes to or uses of these plans. All changes to these plans must be in writing and must be approved by the preparer of these plans.

DESIGNED BY: JL/JM | DRAWN BY: DB/JS
SCALE: | CHECKED BY: JM
BENCH MARK No. 2 | ELEV.: 986.02
MARKED "X" AT NORTHWEST CORNER OF POWER SERVICE TRANSFORMER SET PCC PAD LOCATED NEAR NORTHEAST CORNER OF EXISTING OPERATIONS BUILDING
ELEVATION = 986.02

PREPARED UNDER THE DIRECT SUPERVISION OF:

JESUS R. MARMOLEJO, P.E.
09/11/2020
DATE

80410
R.C.E. No.
03/31/2021
REG. EXP.

REGISTERED PROFESSIONAL ENGINEER JESUS R. MARMOLEJO No. 80410 Exp. 03-31-21 CIVIL STATE OF CALIFORNIA

The Holt Group, Inc.
ENGINEERING * SURVEYING * CONSTRUCTION MANAGEMENT * PLANNING
1601 N. IMPERIAL AVE. EL CENTRO, CA 92243 PHONE : (760) 337-3883 FAX : (760) 337-5997
201 E. HOBSONWAY BLYTHE, CA 92225 PHONE : (760) 922-4658 FAX : (760) 922-4660

PROJECT TITLE : CITY OF HOLTVILLE - WATER TREATMENT PLANT IMPROVEMENT PROJECT - 2017
PROJECT NUMBER : 116.455E
SHEET CONTENT : EMERGENCY GENERATORS DEMOLITION PLAN

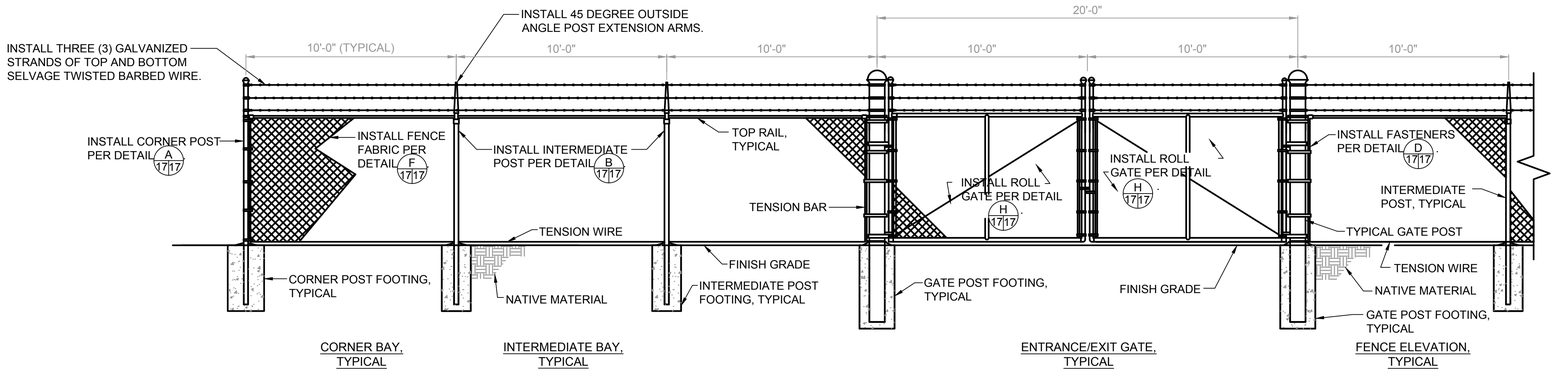

MATERIALS SCHEDULE FOR FENCING

DESCRIPTION	SIZE
I. FABRIC	2" MESH, #9 GAUGE
II. RAILS, POSTS AND GATES	
A. CORNER AND PULL POSTS	2 7/8" O.D. @ 2.72 LB/FT
B. INTERMEDIATE POSTS	2 3/8" O.D. @ 2.23 LB/FT
C. RAILS	1 5/8" @ 1.65 LB/FT
D. GATE POSTS	4" O.D. @ 7.85 LB/FT
E. GATE FRAMES	1 7/8" TUBULAR MATERIAL
III. TENSION BARS	1/4" X 3/4"
IV. TENSION WIRE	#9 GAUGE
V. FOOTINGS	
A. CORNER AND PULL POSTS	10" O.D. x 36" DEEP
B. INTERMEDIATE POSTS	8" O.D. x 30" DEEP
C. GATE POSTS	12" O.D. x 42" DEEP
D. CONCRETE - FOOTINGS SHALL CONSIST OF (7) SACKS OF CEMENT PER CUBIC YARD OF CONCRETE AND SHALL ATTAIN A COMPRESSIVE STRENGTH OF 5,000 PSI AFTER 28 DAYS OF CURING.	

FENCING NOTES

GRADING OF THE GROUND ALONG THE FENCE TO ASSURE A UNIFORM GRADE ALONG THE LENGTH OF THE FENCE SHALL BE ACCOMPLISHED BY THE CONTRACTOR PRIOR TO POST PLACEMENT. THE CHAIN LINK FENCE FABRIC SHALL BE NO. 9 GAUGE STEEL WIRE, 2 INCH MESH, SIX (6) FEET HIGH AND SHALL BE GALVANIZED AFTER WEAVING. IT SHALL BE FASTENED TO THE LINE POSTS BY MEANS OF SUITABLE GALVANIZED CLIPS AT INTERVALS OF NOT MORE THAN TWO (2) FEET AND FASTENED TO THE END, CORNER AND GATE POSTS BY MEANS OF ADJUSTABLE CLAMPS AT INTERVALS NOT TO EXCEED 15 INCHES AND AT TENSION BARS. FABRIC SHALL CONFORM TO ASTM STANDARD A-392, EXCEPT THAT IT SHALL WITHSTAND SIX (6) DIPS OF ONE (1) MINUTE EACH BY THE PREECE TEST (ASTM A-239). PIPE SHALL CONFORM TO ASTM STANDARD A-120. THE CHAIN LINK FABRIC SHALL BE ATTACHED TO THE TENSION WIRE AT INTERVALS OF NOT MORE THAN (2) FEET. TENSION WIRE SHALL CONFORM TO ASTM STANDARD A-112. THE CHAIN LINK GATES TO BE FURNISHED AND INSTALLED SHALL BE JOINED AT THE CORNERS BY ARC WELDING TO FORM A SOLID PANEL, AND SHALL BE SUITABLY BRACED TO PREVENT SAGGING. THE FABRIC SHALL BE THE SAME AS SPECIFIED FOR THE FENCE AND IT SHALL BE FASTENED TO THE FRAME BY MEANS OF ADJUSTABLE CLAMPS AND TENSION RODS. THE GATES SHALL BE EQUIPPED WITH SUITABLE HINGES AND COMBINATION CATCHES AND LOCKING OF APPROVED DESIGN. EXCEPT WHERE OTHERWISE SPECIFIED, ALL PARTS OF THE FENCE, GATES AND PIPE CLAMPS ARE TO BE GALVANIZED THROUGHOUT WITH HOT DIP GALVANIZING IN CONFORMANCE WITH " STANDARD SPECIFICATIONS OF ZINC (HOT GALVANIZED) COATINGS ON STRUCTURAL STEEL SHAPES, PLATES, BARS AND THEIR PRODUCTS" (ASTM A-123), AND WITHSTANDING SIX (6) ONE MINUTE IMMERSIONS BY THE PREECE TEST (ASTM A-239-44). GATES MAY BE GALVANIZED AFTER FABRICATION OR FABRICATED FROM GALVANIZED PARTS, IN WHICH CASE THE WELDS SHALL BE PROTECTED BY AN APPROVED METHOD THAT WILL MEET THE REQUIREMENTS OF THE PREECE TEST REFERENCED ABOVE. POST SHALL BE SET PLUMB AND SHALL BE CENTERED IN THE CONCRETE ENCASEMENT. THE TOP SURFACES OF THE CONCRETE ENCASEMENT SHALL BE SLOPED OUTWARD TO SHED WATER AND SHALL HAVE A NEAT APPEARANCE. ANY GALVANIZED COATING DAMAGED DURING CONSTRUCTION OF THE FENCING SHALL BE CORRECTED BY THE CONTRACTOR AT HIS OWN EXPENSE. AFTER THE FENCE IS INSTALLED, THE CONTRACTOR SHALL COLLECT ALL DEBRIS RESULTING FROM THE FENCE INSTALLATION AND REMOVE IT FROM THE PROJECT SITE. THE GROUND ON EACH SIDE OF THE FENCE SHALL BE LEVELED EVEN WITH THE EXISTING GRADE.

LOCK MECHANISM FOR GATE

A SUITABLE LOCK MECHANISM FOR THE GATE SHALL BE PROVIDED. THE LOCK MECHANISM SHALL BE PROVIDED WITH A GATE LOCK AND SIX KEYS FOR THE LOCK. LOCK MECHANISM SHALL BE APPROVED DURING SUBMITTAL PROCESS.

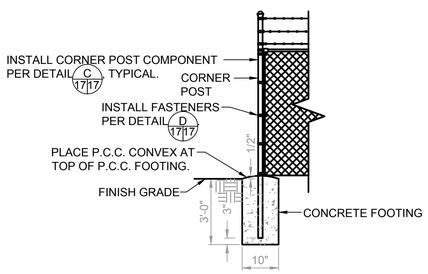

CORNER POST SECTION, TYPICAL (A 17/17)
NOT TO SCALE

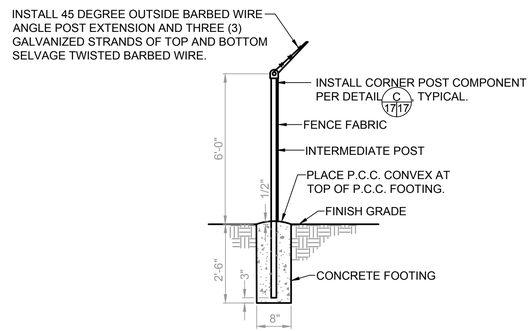

INTERMEDIATE POST SECTION, TYPICAL (B 17/17)
NOT TO SCALE

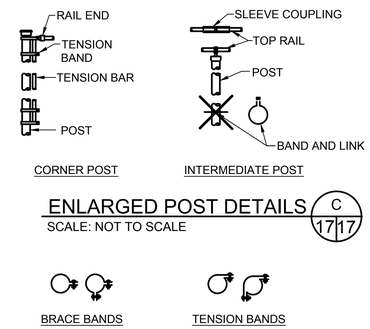

ENLARGED POST DETAILS (C 17/17)
SCALE: NOT TO SCALE

ENLARGED FASTENER DETAILS (D 17/17)
NOT TO SCALE

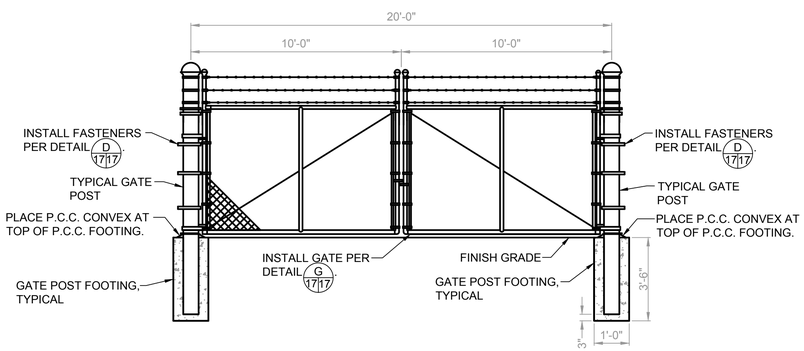

DOUBLE SWING GATE DETAIL (E 17/17)
NOT TO SCALE

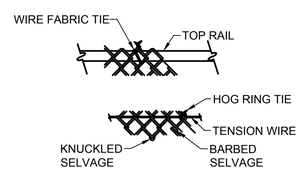

ENLARGED GATE DETAILS (F 17/17)
NOT TO SCALE

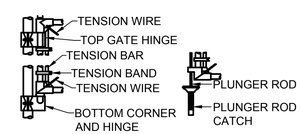

ENLARGED GATE DETAILS (G 17/17)
NOT TO SCALE

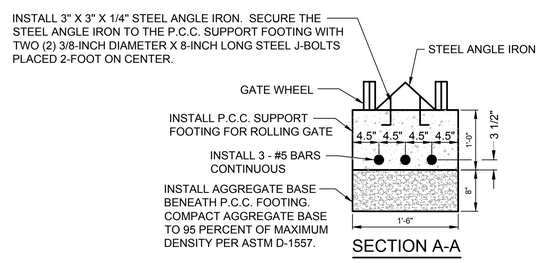

SECTION A-A

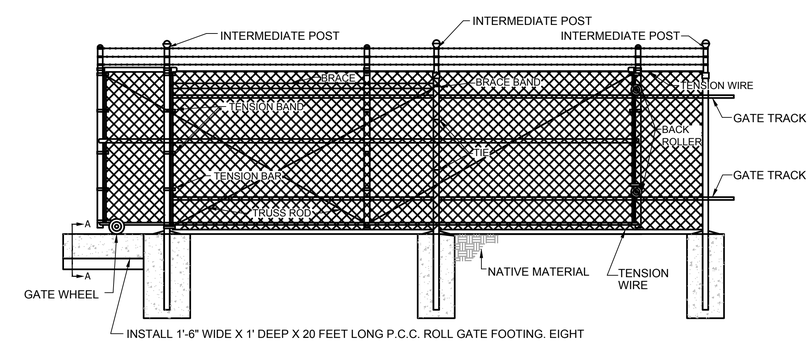

INSTALL 1'-6" WIDE X 1' DEEP X 20 FEET LONG P.C.C. ROLL GATE FOOTING. EIGHT INCHES OF AGGREGATE BASE COMPACTED TO 95 PERCENT OF MAXIMUM DENSITY PER ASTM D-1557 SHALL BE PLACED BENEATH THE P.C.C. FOOTING. THE CONTRACTOR SHALL PROVIDE AN INVERTED ANGLE IRON WITH ATTACHED "L" SHAPED ANCHORS EMBEDDED IN THE P.C.C. FOOTING FOR EACH ROLLING GATE SECTION OR AN APPROVED EQUAL.

ROLL GATE DETAIL (H 17/17)
NOT TO SCALE

No.	REVISION	APPROVED	DATE

UNAUTHORIZED CHANGES AND USES: The engineer preparing these plans will not be responsible for, or liable for, unauthorized changes to or uses of these plans. All changes to these plans must be in writing and must be approved by the preparer of these plans.

DESIGNED BY: JL/JM | DRAWN BY: DB/JS
SCALE: | CHECKED BY: JM
BENCH MARK No. 2 | ELEV.: 986.02
MARKED "X" AT NORTHWEST CORNER OF POWER SERVICE TRANSFORMER SET PCC PAD LOCATED NEAR NORTHEAST CORNER OF EXISTING OPERATIONS BUILDING
ELEVATION = 986.02

PREPARED UNDER THE DIRECT SUPERVISION OF:
JESUS R. MARMOLEJO, P.E.
09/11/2020
DATE
80410
R.C.E. No.
03/31/2021
REG. EXP.

REGISTERED PROFESSIONAL ENGINEER JESUS R. MARMOLEJO No. 80410 Exp. 03-31-21 CIVIL STATE OF CALIFORNIA

The Holt Group, Inc.
ENGINEERING * SURVEYING * CONSTRUCTION MANAGEMENT * PLANNING
1601 N. IMPERIAL AVE. EL CENTRO, CA 92243 PHONE : (760) 337-3883 FAX : (760) 337-5997
201 E. HOBSONWAY BLYTHE, CA 92225 PHONE : (760) 922-4658 FAX : (760) 922-4660

PROJECT TITLE : CITY OF HOLTVILLE - WATER TREATMENT PLANT IMPROVEMENT PROJECT - 2017
PROJECT NUMBER : 116.455E
SHEET CONTENT : FENCING DETAILS

SCHEMATIC DIAGRAM SYMBOLS

CR	CONTROL RELAY
TD	TIME DELAY RELAY
AR	ALARM RELAY
ETM	ELAPSED TIME METER
M	MOTOR STARTER OR CONTACTOR COIL
PC	PHOTO CELL
R	BEACON ALARM LIGHT LETTER INDICATES COLOR R=RED, A=AMBER, B=BLUE, G=GREEN
R	PILOT LIGHT LETTER INDICATES COLOR R=RED, A=AMBER, B=BLUE, G=GREEN
	OUTPUT DV/DT FILTER
	HEATING ELEMENT
	TRANSFORMER
CT	CURRENT TRANSFORMER
	GROUND CONNECTION
	GENERATOR
HORN	HORN
5	FULL VOLTAGE NON-REVERSING (FVNR) MOTOR STARTER OR CONTACTOR NUMBER DESIGNATES NEMA SIZE
	NORMALLY OPEN CONTACT
	NORMALLY CLOSED CONTACT
DI	RTU OR PLC CONTACT
HAND AUTO XO	2 POSITION SELECTOR SWITCH POSITION LEGEND: X=CLOSED O=OPEN
OFF HAND AUTO XOO	3 POSITION SELECTOR SWITCH HAND – OFF – AUTO POSITION LEGEND: X=CLOSED O=OPEN
	NORMALLY CLOSED PUSH BUTTON
	LOCKOUT STOP PUSH BUTTON
	NORMALLY OPEN PUSH BUTTON
	EMERGENCY STOP PUSH BUTTON (MAINTAINED)
AMPS	DISCONNECT SWITCH SHOWN WITH RATING AND NUMBER OF POLES
	LIMIT OR POSITION SWITCH
PSH	PRESSURE SWITCH HIGH
PSL	PRESSURE SWITCH LOW
	FLOW SWITCH
	LEVEL FLOAT SWITCH
T ICTO	TIMER RELAY CONTACT INSTANTANEOUS CLOSE TIME DELAY OPEN
T NOTC	TIMER RELAY CONTACT NORMALLY OPEN TIME DELAY CLOSE
	TEMPERATURE SWITCH
	FUSE
AMPS	FUSEHOLDER OR FUSEBLOCK
	THERMAL OVERLOAD RELAY
	TERMINAL BLOCK
	DEVICE LOCATED AT REMOTE LOCATION
	CONDUIT SEALOFF

POWER SINGLE LINE DIAGRAM SYMBOLS

	JUNCTION BOX WITH POWER DISTRIBUTION BLOCK OR LUGS
	CONDUIT SEALOFF
	LTC CONNECTION
	MC CONNECTION
	BOND TO METALLIC WATER PIPE
UM	UTILITY METER
HP	MOTOR, NUMBER DESIGNATES NEMA HORSEPOWER SIZE
	FUSE
AMPS	FUSEHOLDER OR FUSEBLOCK
AMPS POLES	CIRCUIT BREAKER, SHOWN WITH TRIP RATING AND NUMBER OF POLES
AMPS MCP POLES	MOTOR CIRCUIT PROTECTOR WITH TRIP RATING AND NUMBER OF POLES
AMPS POLES	DISCONNECT SWITCH SHOWN WITH RATING AND NUMBER OF POLES
MMR	MOTOR MANAGEMENT RELAY
SSS	SOLID STATE STARTER
VFD	VARIABLE FREQUENCY DRIVE
HF	HARMONIC FILTER
EOL	ELECTRONIC OVERLOAD RELAY
	GROUND CONNECTION

SITE PLAN SYMBOLS

	TELEPHONE OUTLET
$	SINGLE POLE SWITCH
$3	3 WAY SWITCH
$4	4-WAY SWITCH
$M	MANUAL MOTOR STARTER
	SPECIAL PURPOSE OR WELDING OUTLET
S	SMOKE DETECTOR
T	THERMOSTAT
	FIELD DEVICE
	GROUND ROD
	DUPLEX RECEPTACLE
	ANTENNA MAST
	CONDUIT SEALOFF
	DISCONNECT SWITCH
M	MOTOR
	CONDUIT TURN UP
	CONDUIT TURN DOWN

CIRCUIT SCHEDULE LEGEND

AAA–BC

- SEQUENCE NUMBER
- TYPE C=CONTROL P=POWER
- DEVICE SERVED

ELECTRICAL ABBREVIATIONS

A	AMPERE
AFD	ADJUSTABLE FREQUENCY DRIVE
AFF	ABOVE FINISHED FLOOR
AFG	ABOVE FINISHED GRADE
AI	ANALOG INPUT
AIC	AMPS INTERRUPTING CAPACITY
AO	ANALOG OUTPUT
AS	AIR SUPPLY
ATS	AUTOMATIC TRANSFER SWITCH
BC	BYPASS CONTACTOR
C	CONDUIT
CB	CIRCUIT BREAKER
CCW	COUNTER CLOCKWISE
CL2	CHLORINE
CON	CONTACTOR
CPB	CONTROL PULLBOX
CU	COPPER, BARE
CV	CONTROL VALVE
CW	CLOCKWISE
DCS	DISTRIBUTED CONTROL SYSTEM
DI	DISCRETE INPUT
DO	DISCRETE OUTPUT
DP	DISTRIBUTION PANEL
DV/DT	DIFFERENTIAL VOLTAGE/TIME
DWG	DRAWING
ETM	ELAPSED TIME METER
EOL	ELECTRONIC OVERLOAD
EXIST	EXISTING
FA	FOUL AIR
FC	FAIL CLOSED
FE	FLOW ELEMENT
FLA	FULL LOAD AMPS
FS	FLOW SWITCH
FVNR	FULL VOLTAGE NON-REVERSING
FW	FINISHED WATER
GFCI	GROUND FAULT CIRCUIT INTERRUPTER
GFP	GROUND FAULT PROTECTION
GND	GROUND
GPD	GALLONS PER DAY
GPH	GALLONS PER HOUR
GPM	GALLONS PER MINUTE
GRS	GALVANIZED RIGID STEEL
H, HI	HIGH
H2S	HYDROGEN SULFIDE
HMI	HUMAN MACHINE INTERFACE
HOA	HAND–OFF–AUTO
HOR	HAND–OFF–REMOTE
I	CURRENT
IC	INSTRUMENTATION CABLE
ICR	INTERMITTENT CYCLE REACTOR
IO	INPUT/OUTPUT
ISC	SHORT CIRCUIT CURRENT
ITBX	INTERMEDIATE TERMINATION BOX
JB	JUNCTION BOX
L, LO	LOW
LAN	LOCAL AREA NETWORK
LC	LOOP CONTROLLER
LCL	LEVEL CONTROL, LOW
LCP	LOCAL CONTROL PANEL
LOS	LOCK–OUT–STOP
LOR	LOCAL/OFF/REMOTE
LS	LEVEL (i.e.. FLOAT) SWITCH
LTC	LIQUIDTIGHT FLEXIBLE METAL CONDUIT
M	MOTOR
MA	MANUAL/AUTO
mA	MILLIAMP
MAX	MAXIMUM
MC	MANUFACTURER'S CABLE
MCB	MAIN CIRCUIT BREAKER
MCC	MOTOR CONTROL CENTER
MCP	MOTOR CIRCUIT PROTECTOR
MFR(S)	MANUFACTURER(S)
MGD	MILLION GALLONS PER DAY
MGL	MILLIGRAMS PER LITER
MH	MANHOLE
MIN	MINIMUM
MOV	MOTOR OPERATED VALVE
MMR	MOTOR MANAGEMENT RELAY
MTU	MASTER TELEMETRY UNIT
NEC	NATIONAL ELECTRICAL CODE
NECA	NATIONAL ELECTRICAL CONTRACTOR ASSOCIATION
N.C.	NORMALLY CLOSED
N.O.	NORMALLY OPEN
NIC	NOT IN CONTRACT
NOTC	NORMALLY OPEN TIMED CLOSED
NPW	NON–POTABLE WATER
NS	NITROGEN SUPPLY
NTS	NOT TO SCALE
NTU	TURBIDITY
OF	OVERFLOW
OIT	OPERATOR INTERFACE TERMINAL
OL	OVERLOAD
OLR	OVERLOAD RELAY
OO	ON/OFF (MAINTAINED)
OR	OFF–REMOTE
OSC	OPEN/STOP/CLOSE
P	PHASE
PB	PULL BOX
PCP	PROCESS CONTROL PANEL
PCV	PRESSURE CONTROL VALVE
PFR	PHASE/POWER FAILURE RELAY
PI	PULSE INPUT
PLC	PROGRAMMABLE LOGIC CONTROLLER
PLI	PLANT INFLUENT
PMP	PUMP
PNL	PANEL
PO	PULSE OUTPUT
PPB	POWER PULLBOX
PPG	POUNDS PER GALLON
PPH	POUNDS PER HOUR
PPM	PARTS PER MILLION
PR	PAIR
PRES	PRESSURE
PS	PRESSURE SWITCH
PSH	PRESSURE SWITCH, HIGH
PSI	POUNDS PER SQUARE INCH
PV	PROCESS VARIABLE
RAS	RETURN ACTIVATED SLUDGE
RW	RAW WATER
RF	RADIO FREQUENCY
RIO	REMOTE INPUT OUTPUT
RS	RAW SEWAGE
RSP	RAW SEWAGE PUMP
RST	RESET
RTD	RESISTANCE TEMPERATURE DETECTOR
RTU	REMOTE TELEMETRY UNIT
RWT	REFLECTED WAVE TRAP
SCA	SHORT CIRCUIT AMPS
SEQ	SERVICE ENTRANCE EQUIPMENT
SES	SERVICE ENTRANCE SECTION
SLC	SINGLE LOOP CONTROLLER
SLOS	START–LOCK–OUT–STOP
SMC	SUBMERSIBLE MANUFACTURER CABLE
SO2	SULFUR DIOXIDE
SP	SET POINT
SPC	SPARE CONDUIT
SPR	SPARE
SS	START/STOP
SSS	SOLID STATE STARTER (SOFT START)
ST	SHUNT TRIP
TC	TELEPHONE CABLE
TS	TEMPERATURE SWITCH
TVSS	TRANSIENT VOLTAGE SURGE SUPPRESSOR
TYP	TYPICAL
UG	UNDERGROUND
UL	UNDERWRITERS LABORATORIES
UNO	UNLESS NOTED OTHERWISE
V	VOLT
VFD	VARIABLE FREQUENCY DRIVE
W	WATT, WIRE
WAS	WASTE ACTIVATED SLUDGE
WP	WEATHERPROOF
XFMR	TRANSFORMER
XMR	TRANSFORMER
XMTR	TRANSMITTER
ZS	POSITION (i.e.. LIMIT) SWITCH

ELECTRICAL LINETYPES

- EXPOSED CONDUIT
- EXISTING EXPOSED CONDUIT
- UNDERGROUND CONDUIT
- EXISTING UNDERGROUND CONDUIT
- BARE COPPER GROUND CONDUCTOR
- EXISTING OR FUTURE
- NEW ELECTRICAL EQUIPMENT
- DEMOLITION
- DETAIL VIEW OR MATCHING
- CAPPED CONDUIT STUB OUT

PXXX
CXXX

GROUPED CONDUIT AND CIRCUIT IDENTIFICATION TAGS. REFER TO THE POWER SINGLE–LINE, SCHEMATIC CONNECTION DIAGRAMS AND CIRCUIT SCHEDULE FOR CONDUIT SIZES AND CONTENTS.

P=POWER
C=CONTROL

GENERAL NOTES

1. THE COMPLETED INSTALLATION SHALL COMPLY WITH LATEST REVISION OF APPLICABLE FEDERAL, STATE, AND LOCAL CODES, ORDINANCES, AND REGULATIONS. THE CONTRACTOR SHALL OBTAIN NECESSARY PERMITS AND INSPECTIONS REQUIRED BY THE AUTHORITIES HAVING JURISDICTION. ALL WORK SHALL BE COMPLETED IN A NEAT, WORKMANLIKE MANNER IN ACCORDANCE WITH THE LATEST NECA STANDARDS OF INSTALLATION UNDER COMPETENT SUPERVISION. INSTALL GROUNDING PER NEC.
2. VISIT THE SITE PRIOR TO BIDDING TO BECOME FAMILIAR WITH EXISTING CONDITIONS AND OTHER FACTORS, WHICH MAY AFFECT THE EXECUTION OF THE WORK. INCLUDE ALL RELATED COSTS IN THE INITIAL BID PROPOSAL.
3. THE CONTRACTOR SHALL COORDINATE WORK WITH THE UTILITIES PROVIDING SERVICES ON THIS PROJECT, AND SHALL COMPLY WITH ALL THEIR INSTALLATION REQUIREMENTS.
4. ALL MATERIALS SHALL BE NEW AND OF THE BEST QUALITY, MANUFACTURED IN ACCORDANCE WITH THE LATEST REVISION OF NEMA, ANSI, UL, OR OTHER APPLICABLE STANDARDS. THE USE OF MANUFACTURERS' NAMES, MODELS, AND NUMBERS IS INTENDED TO ESTABLISH STYLE, QUALITY, APPEARANCE, USEFULNESS, AND BID PRICE.
5. PROTECT ALL ELECTRICAL MATERIAL AND EQUIPMENT INSTALLED AGAINST DAMAGE BY OTHER TRADES, WEATHER CONDITIONS, OR ANY OTHER PREVENTABLE CAUSES. EQUIPMENT DAMAGED DURING SHIPPING OR CONSTRUCTION, PRIOR TO ACCEPTANCE BY THE ENGINEER OR THE OWNER, WILL BE REJECTED AS DEFECTIVE.
6. LEAVE THE SITE CLEAN. REMOVE ALL DEBRIS, EMPTY CARTONS, TOOLS, CONDUIT, WIRE SCRAPS AND ALL MISCELLANEOUS SPARE EQUIPMENT AND MATERIALS USED IN THE WORK DURING CONSTRUCTION. ALL COMPONENTS SHALL BE FREE OF DUST, GRIT AND FOREIGN MATERIALS, LEFT AS NEW BEFORE FINAL ACCEPTANCE OF WORK. DAMAGED PAINT AND FINISHES SHALL BE TOUCHED UP OR REPAINTED WITH MATCHING COLOR PAINT AND FINISH.
7. CIRCUIT CONDUCTORS #6 AWG OR SMALLER SHALL BE THWN STRANDED COPPER. #4 AWG THROUGH #2 AWG SHALL BE XHHW STRANDED COPPER. #1 AWG OR LARGER SHALL BE XHHW–2 STRANDED COPPER. MINIMUM POWER CONDUCTOR SIZE SHALL BE #12 AWG WITH #12 AWG GROUND.
8. UNDERGROUND CONDUITS SHALL BE SCHEDULE 40 PVC. MINIMUM CONDUIT DEPTH SHALL BE 24 INCHES. MINIMUM UNDERGROUND CONDUIT SIZE SHALL BE 1 INCH.
9. CONDUITS SHALL BE MARKED AT EACH END WITH MATCHING NUMBERED BRASS TAGS. SPARE CONDUITS SHALL HAVE A PULL STRING INSTALLED, SECURED, AND CAPPED.
10. EXPOSED CONDUITS SHALL BE GALVANIZED RIGID STEEL (GRS). MINIMUM SIZE 3/4 INCH, UNLESS OTHERWISE NOTED ON THE PLANS.
11. SAFETY SWITCHES, ELECTRICAL DISTRIBUTION EQUIPMENT, CONTROL PANELS, AND OTHER ELECTRICAL DEVICES SHALL BE UL LISTED, AND RATED FOR HEAVY DUTY SERVICE.
12. WIRING DEVICES SHALL BE SPECIFICATION GRADE.
13. THE CONTRACTOR IS RESPONSIBLE FOR MANAGING, SCHEDULING, DOCUMENTING, AND PERFORMING THE WORK SO THAT A COMPLETE ELECTRICAL, INSTRUMENTATION AND CONTROL SYSTEM FOR THE FACILITY IS PROVIDED. ACCURATE SHOP AND RECORD DRAWINGS, AND O&M MANUALS SHALL BE SUBMITTED PRIOR TO FINAL ACCEPTANCE OF THE WORK.
14. TYPICAL DETAILS SHALL APPLY IN ALL CASES, WHETHER SPECIFICALLY REFERRED TO OR NOT.

E001

DELTA SYSTEMS
202 E. EARLL DRIVE, SUITE 110
PHOENIX, AZ 85012 602.266.4658

No.	REVISION	APPROVED	DATE

UNAUTHORIZED CHANGES AND USES: The engineer preparing these plans will not be responsible for, or liable for, unauthorized changes to or uses of these plans. All changes to these plans must be in writing and must be approved by the preparer of these plans.

DESIGNED BY: CW/DN	DRAWN BY: CW
SCALE:NTS	CHECKED BY: DN
BENCH MARK No.	ELEV.:

PREPARED UNDER THE DIRECT SUPERVISION OF:

BRIAN D. DOWNING — 17607 R.E.E. No.

09/15/2020 DATE — 6-30-21 REG. EXP.

REGISTERED PROFESSIONAL ENGINEER BRIAN DOWNING No. 17607 Exp. 06/30/21 ELECTRICAL STATE OF CALIFORNIA 09/15/20

The Holt Group, Inc.
ENGINEERING * SURVEYING * CONSTRUCTION MANAGEMENT * PLANNING
1601 N. IMPERIAL AVE. EL CENTRO, CA 92243 PHONE: (760) 337-3883 FAX: (760) 337-5997
201 E. HOBSONWAY BLYTHE, CA 92225 PHONE: (760) 922-4658 FAX: (760) 922-4660

PROJECT TITLE : CITY OF HOLTVILLE - WATER TREATMENT PLANT IMPROVEMENTS - CONTROL SYSTEM IMPROVEMENTS

PROJECT NUMBER : 116.455

SHEET CONTENT : ELECTRICAL NOTES, SYMBOLS AND LEGEND

SHEET NO. 18 OF 46 SHEETS

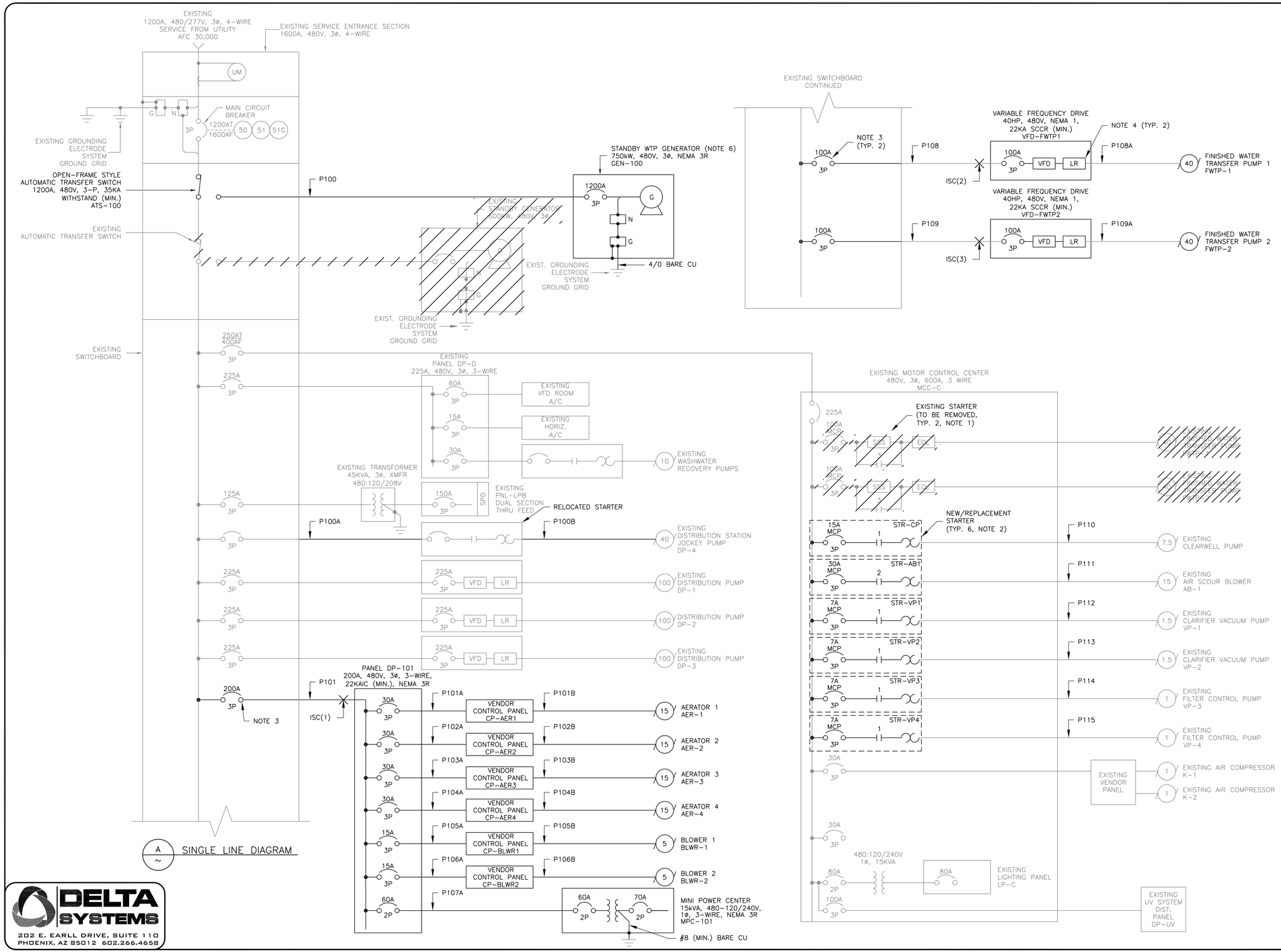

A SINGLE LINE DIAGRAM

NOTES:

1. EXISTING STARTERS INSIDE MCC 'MCC-C' (WESTINGHOUSE SERIES 2100) ASSOCIATED WITH FILTERED WATER PUMPS SHALL BE REMOVED AND REPLACED WITH BLANK SPACES/DOORS. REMOVED STARTERS SHALL BE PROPERLY DISPOSED OF.
2. EXISTING STARTERS INSIDE MCC 'MCC-C' ASSOCIATED WITH VACUUM PUMPS 'VP-1', 'VP-2', 'VP-3' & 'VP-4', CLEARWELL PUMP AND AIR SCOUR BLOWER SHALL BE REPLACED WITH NEW STARTERS AS SHOWN. REMOVED STARTERS SHALL BE PROPERLY DISPOSED OF.
3. ADD NEW BREAKERS IN EXISTING SERVICE SWITCHBOARD DISTRIBUTION SECTION (WESTINGHOUSE POW-R-LINE C) TO SUPPLY POWER TO NEW FINISHED WATER TRANSFER PUMP VFD'S AND TO NEW DISTRIBUTION PANEL 'DP-101'. NEW BREAKERS SHALL HAVE A MINIMUM AIC RATING OF 35KA.
4. LOAD REACTORS SHALL BE PROVIDED IN ASSOCIATION WITH NEW VFD STARTERS AS RECOMMENDED BY MANUF. BASED ON A MOTOR CONDUCTOR LENGTH OF 300'.
5. EXISTING SITE LOAD INFORMATION INCLUDING LOAD CALCULATIONS FOR UV SYSTEM (PANEL DP-UV) WERE TAKEN FROM 'CITY OF HOLTVILEE – REPLACEMENT OF 1.5 MILLION GALLON RESERVOIR AND ULTRAVIOLET DISINFECTION SYSTEM IMPROVEMENT' PROJECT DESIGN PACKAGE DEVELOPED BY DELTA SYSTEMS ENGINEERING DATED 3/06/2012.
6. GENERATOR HAS BEEN SIZED TO OPERATE ALL SITE LOADS.

CALLOUT NO.	NO. SETS	CONDUIT SIZE	CIRCUIT CONDUCTORS	CIRCUIT NO.'s
P100	4	2 1/2"	3 - 350 MCM, #3/0 GND	GEN100-P1
P100A	1	1"	3 - #4, #8 GND	STRDP4-P1
P100B	1	1"	3 - #4, #8 GND	DP4-P1
P101	1	2"	3 - #3/0, #6 GND	DP101-P1
P101A	1	3/4"	3 - #10, #10 GND	CPAER1-P1
P101B	1	3/4"	3 - #10, #10 GND	AER1-P1
P102A	1	3/4"	3 - #10, #10 GND	CPAER2-P1
P102B	1	3/4"	3 - #10, #10 GND	AER2-P1
P103A	1	3/4"	3 - #10, #10 GND	CPAER3-P1
P103B	1	3/4"	3 - #10, #10 GND	AER3-P1
P104A	1	3/4"	3 - #10, #10 GND	CPAER4-P1
P104B	1	3/4"	3 - #10, #10 GND	AER4-P1
P105A	1	3/4"	3 - #12, #12 GND	CPBLWR1-P1
P105B	1	3/4"	3 - #12, #12 GND	BLWR1-P1
P106A	1	3/4"	3 - #12, #12 GND	CPBLWR2-P1
P106B	1	3/4"	3 - #12, #12 GND	BLWR2-P1
P107A	1	1"	3 - #4, #10 GND	MPC101-P1
P108	1	EXISTING	3 - #4, #8 GND	VFDFWTP1-P1
P108A	1	EXISTING	3 - #4, #8 GND	FWTP1-P1
P109	1	EXISTING	3 - #4, #8 GND	VFDFWTP2-P1
P109A	1	EXISTING	3 - #4, #8 GND	FWTP2-P1
P110	1	EXISTING	3 - #12, #12 GND	CP-P1
P111	1	EXISTING	3 - #10, #10 GND	AB1-P1
P112	1	EXISTING	3 - #12, #12 GND	VP1-P1
P113	1	EXISTING	3 - #12, #12 GND	VP2-P1
P114	1	EXISTING	3 - #12, #12 GND	VP3-P1
P115	1	EXISTING	3 - #12, #12 GND	VP4-P1

B CALLOUT SCHEDULE

DELTA SYSTEMS
202 E. EARLL DRIVE, SUITE 110
PHOENIX, AZ 85012 602.266.4658

E002

No.	REVISION	APPROVED	DATE

UNAUTHORIZED CHANGES AND USES: The engineer preparing these plans will not be responsible for, or liable for, unauthorized changes to or uses of these plans. All changes to these plans must be in writing and must be approved by the preparer of these plans.

DESIGNED BY: CW/DN | DRAWN BY: CW
SCALE:NTS | CHECKED BY: DN
BENCH MARK No. | ELEV.:

PREPARED UNDER THE DIRECT SUPERVISION OF:

BRIAN D. DOWNING — 17607 R.E.E. No.

09/15/2020 DATE — 6-30-21 REG. EXP.

REGISTERED PROFESSIONAL ENGINEER BRIAN DOWNING No. 17607 Exp. 06/30/21 ELECTRICAL STATE OF CALIFORNIA 09/15/20

The Holt Group, Inc.
ENGINEERING * SURVEYING * CONSTRUCTION MANAGEMENT * PLANNING
1601 N. IMPERIAL AVE. EL CENTRO, CA 92243 PHONE: (760) 337-3883 FAX: (760) 337-5997
201 E. HOBSONWAY BLYTHE, CA 92225 PHONE: (760) 922-4658 FAX: (760) 922-4660

PROJECT TITLE : CITY OF HOLTVILLE - WATER TREATMENT PLANT IMPROVEMENTS - CONTROL SYSTEM IMPROVEMENTS

PROJECT NUMBER : 116.455

SHEET CONTENT : WATER TREATMENT PLANT SINGLE LINE DIAGRAM

SHEET NO. 19 OF 46 SHEETS

XREF: 1952_BDR

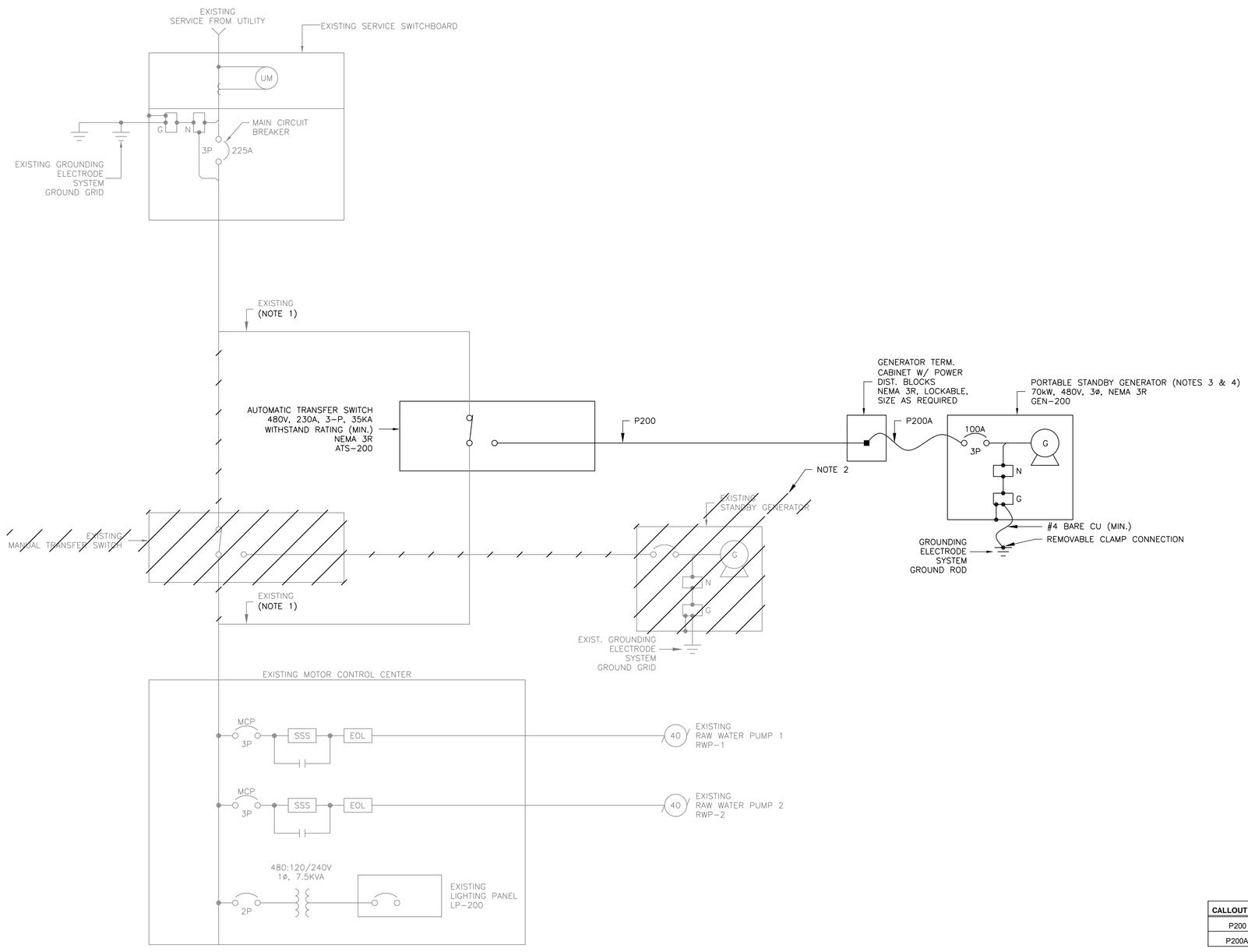

A ~ SINGLE LINE DIAGRAM

NOTES:

1. REUTILIZE EXISTING CONDUCTORS GOING TO/FROM EXISTING MANUAL TRANSFER SWITCH FOR NEW AUTOMATIC TRANSFER SWITCH.
2. REMOVE EXISTING GENERATOR, ASSOCIATED PAD AND MANUAL TRANSFER SWITCH. REMOVED EQUIPMENT SHALL BE EITHER GIVEN TO OWNER FOR PROPER STORAGE OR PROPERLY DISPOSED OF AS DIRECTED BY OWNER.
3. GENERATOR HAS BEEN SIZED TO OPERATE (1) 40HP PUMP ALONG WITH ALL SITE 120/240V LOADS AT AN AMBIENT OF 120 DEG. F. GENERATOR IS CAPABLE OF OPERATING ALL SITE LOADS IF AMBIENT IS AT OR BELOW 104 DEG. F. (WOULD BE OPERATING AT ~98% FULL LOAD CAPACITY).
4. GENERATOR SHALL BE OF THE PORTABLE TYPE AND SHALL BE TRAILER MOUNTED. GENERATOR SHALL BE EQUIPPED WITH 'PIGTAIL' STYLE CONNECTIONS TO FACILITATE CONNECTION OF PRIMARY POWER, 120V POWER (I.E. BLOCK HEATER, BATTERY CHARGER), GROUNDING AND ALARM/STATUS SIGNALS. PIGTAIL CONNECTIONS SHALL BE ROUTED THROUGH FLEX CONDUIT TO ENSURE SECURE AND PROTECTED CONNECTIONS FROM GENERATOR TO RESPECTIVE TERMINATION BOX.

CALLOUT NO.	NO. SETS	CONDUIT SIZE	CIRCUIT CONDUCTORS	CIRCUIT NO.'s
P200	1	1 1/2"	3 - #1, #8 GND	GEN200-P1
P200A	1	1 1/2" FLEX	3 - #1, #8 GND	GEN200-P2

B ~ CALLOUT SCHEDULE

DELTA SYSTEMS
202 E. EARLL DRIVE, SUITE 110
PHOENIX, AZ 85012 602.266.4658

E003

No.	REVISION	APPROVED	DATE

UNAUTHORIZED CHANGES AND USES: The engineer preparing these plans will not be responsible for, or liable for, unauthorized changes to or uses of these plans. All changes to these plans must be in writing and must be approved by the preparer of these plans.

DESIGNED BY: CW/DN	DRAWN BY: CW
SCALE:NTS	CHECKED BY: DN
BENCH MARK No.	ELEV.:

PREPARED UNDER THE DIRECT SUPERVISION OF:

BRIAN D. DOWNING — 17607 R.E.E. No.

09/15/2020 DATE — 6-30-21 REG. EXP.

REGISTERED PROFESSIONAL ENGINEER BRIAN DOWNING No. 17607 Exp. 06/30/21 ELECTRICAL STATE OF CALIFORNIA 09/15/20

The Holt Group, Inc.
ENGINEERING * SURVEYING * CONSTRUCTION MANAGEMENT * PLANNING
1601 N. IMPERIAL AVE. EL CENTRO, CA 92243 PHONE: (760) 337-3883 FAX: (760) 337-5997
201 E. HOBSONWAY BLYTHE, CA 92225 PHONE: (760) 922-4658 FAX: (760) 922-4660

PROJECT TITLE : CITY OF HOLTVILLE - WATER TREATMENT PLANT IMPROVEMENTS - CONTROL SYSTEM IMPROVEMENTS

PROJECT NUMBER : 116.455

SHEET CONTENT : RAW WATER PUMP STATION/POND SINGLE LINE DIAGRAM

SHEET NO. 20 OF 46 SHEETS

XREF: 1952_BDR

DWG FILE: X:\1900'S\1952.00 HOLTVILLE WTP CONTROLS SYSTEM UPGRADE RFP DEVELOPMENT\100 - E&I DESIGN_CAD FILES\1952.00.100_E003.DWG 3:31PM PLOTTED: Sep 15, 2020 jahrens

NOTES:

1. EXISTING SITE LOAD INFORMATION INCLUDING LOAD CALCULATIONS FOR UV SYSTEM (PANEL DP–UV) WERE TAKEN FROM 'CITY OF HOLTVILEE – REPLACEMENT OF 1.5 MILLION GALLON RESERVOIR AND ULTRAVIOLET DISINFECTION SYSTEM IMPROVEMENT' PROJECT DESIGN PACKAGE DEVELOPED BY DELTA SYSTEMS ENGINEERING DATED 3/06/2012.

PANEL TAG No.	MPC-101	**NEMA TYPE/MOUNTING**	3R/RACK
LOCATION	ELECTRICAL EQUIPMENT RACK	**MAIN DEVICE**	70A MCB
BUS AMPACITY	100	**AIC RATING**	22K
VOLTS, PHASE, WIRE	240 V/1-PHASE/3-WIRE	**FED FROM**	DP-101
REMARKS		**ACCESSORIES**	

LOAD VA PHASE A	LOAD VA PHASE B	LOAD DESCRIPTION	WIRE SIZE	DEMAND	BKR	BKR. NO.		BKR	DEMAND	WIRE SIZE	LOAD DESCRIPTION	LOAD VA PHASE A	LOAD VA PHASE B
1320		MIXER 1 CONTROL PANEL	#12	1.25	20/1	1	2	40/2	1.25	#8	GENERATOR PANEL	3500	
	1320	MIXER 2 CONTROL PANEL	#12	1.25	20/1	3	4		1.25	#8	GENERATOR PANEL		3500
0		SPARE			20/1	5	6	20/1	1.25	#12	CATHODIC PROTECTION	1200	
	0	SPARE			20/1	7	8	20/1			SPARE		0
0		SPARE			20/1	9	10	20/1			SPARE	0	
	0	SPACE				11	12				SPACE		0
0		SPACE				13	14				SPACE	0	
	0	SPACE				15	16				SPACE		0
0		SPACE				17	18				SPACE	0	
	0	SPACE				19	20				SPACE		0
0		SPACE				21	22				SPACE	0	
	0	SPACE				23	24				SPACE		0
0		SPACE				25	26				SPACE	0	
1320	1320	CONNECTED VA									CONNECTED VA	4700	3500
1650	1650	DEMAND VA									DEMAND VA	5875	4375

		VA	AMPS			
* - Each branch circuit				TOTAL CONNECTED VA - PER PHASE	6020	4820
shall have an	TOTAL PANEL CONNECTED LOAD	10840	45.17	TOTAL DEMAND VA - PER PHASE	7525	6025
equipment grounding conductor	TOTAL PANEL DEMAND LOAD	13550	56.46	TOTAL DEMAND PHASE AMPS	62.7	50.2
sized per N.E.C. Article 250	PANEL DEMAND FACTOR	125%				

A ~ MINI POWER CENTER (MPC–101)

CIRCUIT/DESCRIPTION	KVA	HP	FLA
MOTOR LOADS			
VFD ROOM A/C			34.0
HORIZ. A/C			10.0
WASHWATER RECOVERY PUMPS		10.0	14.0
JOCKEY PUMP		40.0	52.0
DISTRIBUTION PUMP 1		100.0	124.0
DISTRIBUTION PUMP 2		100.0	124.0
DISTRIBUTION PUMP 3		100.0	124.0
FINISHED WATER TRANSFER PUMP 1		40.0	52.0
FINISHED WATER TRANSFER PUMP 2		40.0	52.0
BLOWER		15.0	21.0
CLARIFIER VACUUM PUMP 1		1.5	3.0
CLARIFIER VACUUM PUMP 2		1.5	3.0
CLARIFIER VACUUM PUMP 3		1.0	2.1
CLARIFIER VACUUM PUMP 4		1.0	2.1
AIR COMPRESSOR 1		1.0	2.1
AIR COMPRESSOR 2		1.0	2.1
CLEARWELL PUMP (EXISTING)		7.5	11.0
NON-MOTOR & COMBINATION LOADS			
DP-101 (THM REMOVAL SYSTEM)			135.7
SINGLE PHASE 480:120/240V XFMR. (MCC-C)	15.0		31.3
THREE PHASE 480:120/208V XFMR. (OPS. BLDG.)	45.0		54.1
DP-UV (UV SYSTEM)			64.0
SUBTOTAL			917.5
+ 25% OF LARGEST MOTOR			31.0
TOTAL AMPS @ 480V/3PHASE			948.5
SERVICE SIZE (AMPS)			1200.0

B ~ LOAD CALCULATIONS – SERVICE
(NOTE 1)

CIRCUIT/DESCRIPTION	KVA	HP	FLA
MOTOR LOADS			
AERATOR 1		15.0	21.0
AERATOR 2		15.0	21.0
AERATOR 3		15.0	21.0
AERATOR 4		15.0	21.0
BLOWER 1		5.0	7.6
BLOWER 2		5.0	7.6
NON-MOTOR & COMBINATION LOADS			
SINGLE PHASE MPC	15.0		31.3
SUBTOTAL			130.5
+ 25% OF LARGEST MOTOR			5.3
TOTAL AMPS @ 480V/3PHASE			135.7

C ~ LOAD CALCULATIONS – PANEL DP–101
(NOTE 1)

SHEET NO.	CIRCUIT	CONDUCTORS
E009	VFDFWTP1-C1	6 - #14, #14 GND
E009	VFDFWTP1-C2	2 - #14, #14 GND
E009	VFDFWTP1-C3	2 - IC, #14 GND
E009	VFDFWTP2-C1	6 - #14, #14 GND
E009	VFDFWTP2-C2	2 - #14, #14 GND
E009	VFDFWTP2-C3	2 - IC, #14 GND
E010	STRVP1-C1	6 - #14, #14 GND
E010	STRVP1-C2	2 - #14, #14 GND
E010	STRVP2-C1	6 - #14, #14 GND
E010	STRVP2-C2	2 - #14, #14 GND
E010	STRVP3-C1	6 - #14, #14 GND
E010	STRVP3-C2	2 - #14, #14 GND
E010	STRVP3-C3	2 - #14, #14 GND
E010	STRVP4-C1	6 - #14, #14 GND
E010	STRVP4-C2	2 - #14, #14 GND
E010	STRVP4-C3	2 - #14, #14 GND
E010	MP1-P1	2 - #12, #12 GND
E010	STRMP1-C1	6 - #14, #14 GND
E010	STRMP1-C2	2 - #14, #14 GND
E010	MPCP100-P1	2 - #12, #12 GND
E010	CAOCL-P1	2 - #12
E010	MPCP100-C1	4 - #14, #14 GND
E010	MPCP100-C2	4 - #14, #14 GND
E011	ATS100-C1	2 - #14, #14 GND
E011	ATS100-C2	4 - #14, #14 GND
E011	GEN100-C1	4 - #14, #14 GND
E011	GEN100-C2	6 - #14, #14 GND
E011	GEN200-C3	2 - #12, #12 GND
E011	ATS200-C1	2 - #14, #14 GND
E011	ATS200-C2	4 - #14, #14 GND
E011	GEN200-C4	2 - #12, #12 GND
E011	ATS200-C3	2 - #14, #14 GND
E011	GEN200-C1	4 - #14, #14 GND
E011	GEN200-C2	6 - #14, #14 GND
E011	GEN200-C5	4 - #14, #14 GND
E011	GEN200-C6	6 - #14, #14 GND
E013	VCC100-C1	72 - #14, #14 GND
E013	VCC100-C2	48 - #14, #14 GND
E013	MPC100-21	2 - #12, #12 GND
E014	LIT101-C1	1 - IC, #14 GND
E014	LIT102-C1	1 - IC, #14 GND
E014	LIT103-C1	1 - IC, #14 GND
E014	LIT104-C1	1 - IC, #14 GND
E014	LIT110-C1	1 - IC, #14 GND
E014	AE126A-C1	1 - MANUF. CABLE
E014	AE126B-C1	1 - MANUF. CABLE
E014	MPC100-22	2 - #12, #12 GND
E014	DP4STR-C1	2 - #14, #14 GND
E014	BPVFD-C1	1 - RS-485 CABLE
E014	PLC100-P1	2 - #12, #12 GND
E014	AIT126-C1	2 - IC, #14 GND
E014	RIO100-C1	1 - 50µM FIBER
E014	RIO100-C2	1 - CAT6 CABLE
E014	CWCL2-C1	1 - IC, #14 GND
E014	CWCL2-C2	1 - IC

SHEET NO.	CIRCUIT	CONDUCTORS
E014	VCC100-C3	49 - #14, #14 GND
E014	FV230-C1	1 - IC, #14 GND
E014	T1PSH-C1	2 - #14, #14 GND
E014	LIT1-C1	1 - IC, #14 GND
E014	LIT2-C1	1 - IC, #14 GND
E014	LIT3-C1	1 - IC, #14 GND
E014	VCC100-C4	20 - #14, #14 GND
E015	CPBLWR1-C1	4 - #14, #14 GND
E015	CPBLWR2-C1	4 - #14, #14 GND
E015	CPMIX1-C1	4 - #14, #14 GND
E015	CPMIX2-C1	4 - #14, #14 GND
E015	CPAER1-C1	4 - #14, #14 GND
E015	CPAER2-C1	4 - #14, #14 GND
E015	CPAER3-C1	4 - #14, #14 GND
E015	CPAER4-C1	4 - #14, #14 GND
E015	FSL191-C1	2 - #14, #14 GND
E015	FSL192-C1	2 - #14, #14 GND
E015	FSL193-C1	2 - #14, #14 GND
E015	FSL196-C1	2 - #14, #14 GND
E015	T1LEVEL-C1	1 - IC
E015	T1LEVEL-C2	1 - IC
E015	T1CL2-C1	1 - IC
E015	T1CL2-C2	1 - IC
E015	TURB1-C1	1 - IC
E015	TURB1-C2	1 - IC
E015	TURB2-C1	1 - IC
E015	TURB2-C2	1 - IC
E015	TURB3-C1	1 - IC
E015	TURB3-C2	1 - IC
E015	TURB4-C1	1 - IC
E015	TURB4-C2	1 - IC
E015	BSCL2-C1	1 - IC
E015	BSCL2-C2	1 - IC
E015	INFFLOW-C1	1 - IC
E015	INFFLOW-C2	1 - IC
E015	BPS-C1	1 - IC
E015	BPS-C2	1 - IC
E015	BSFLOW-C1	1 - IC
E015	BSFLOW-C2	1 - IC
E015	BSTEMP-C1	1 - IC
E015	BSTEMP-C2	1 - IC
E015	BSPH-C1	1 - IC
E015	BSPH-C2	1 - IC
E015	LIT4-C1	1 - IC
E015	TURB5-C1	1 - IC
E015	TURB5-C2	1 - IC
E015	T2LEVEL-C1	1 - IC
E015	T2LEVEL-C2	1 - IC
E016	WIO200-C1	12 - #14, #14 GND
E016	LIT201-C1	1 - IC, #14 GND
E016	STRCP-C1	6 - #14, #14 GND
E016	STRCP-C2	2 - #14, #14 GND
E016	STRAB1-C1	6 - #14, #14 GND
E016	STRAB1-C2	2 - #14, #14 GND

D ~ MASTER CIRCUIT SCHEDULE

SHORT CIRCUIT CALCULATIONS

DEFINITIONS		FORMULAS
ISC =	SHORT CIRCUIT CURRENT (AMPS)	3 PH: $f = \frac{1.732 \times L \times Isc}{N \times C \times V_{L-L}}$
N =	NUMBER OF CONDUCTORS/PHASE	
L =	LENGTH OF CONDUCTOR (FEET)	
C =	CONSTANT FROM TABLE OF "C"	1 PH: $f = \frac{2 \times L \times Isc}{N \times C \times V_{L-L}}$
Isc =	AVAILABLE SHORT-CIRCUIT AMPS	
V_{L-L} =	LINE TO LINE VOLTAGE (VOLTS)	
V_P =	PRIMARY VOLTAGE	1 PH XFMR: $f = \frac{Iscx\ V_P \times \% Z}{100{,}000 \times KVA}$
V_s =	SECONDARY VOLTAGE	
% Z =	TRANSFORMER % IMPEDANCE	

ISC(1)

$$f1 = \frac{1.732}{1} \times \frac{60}{13923} \times \frac{30{,}000}{480} = 0.4665$$

$$M = \frac{1}{1 + 0.4665} = 0.6819$$

ISC(1) = 30,000 x 0.6819 = 20,457 A

ISC(2)

$$f2 = \frac{1.732}{1} \times \frac{20}{3825} \times \frac{30{,}000}{480} = 0.566$$

$$M = \frac{1}{1 + 0.566} = 0.6386$$

ISC(2) = 30,000 x 0.6386 = 19,158 A

ISC(3)

$$f3 = \frac{1.732}{1} \times \frac{20}{3825} \times \frac{30{,}000}{480} = 0.566$$

$$M = \frac{1}{1 + 0.566} = 0.6386$$

ISC(3) = 30,000 x 0.6386 = 19,158 A

E ~ SHORT CIRCUIT CALCULATIONS

DELTA SYSTEMS
202 E. EARLL DRIVE, SUITE 110
PHOENIX, AZ 85012 602.266.4658

E004

No.	REVISION	APPROVED	DATE

UNAUTHORIZED CHANGES AND USES: The engineer preparing these plans will not be responsible for, or liable for, unauthorized changes to or uses of these plans. All changes to these plans must be in writing and must be approved by the preparer of these plans.

DESIGNED BY: CW/DN	DRAWN BY: CW
SCALE:NTS	CHECKED BY: DN
BENCH MARK No.	ELEV.:

PREPARED UNDER THE DIRECT SUPERVISION OF:

BRIAN D. DOWNING — 17607 R.E.E. No.

09/15/2020 DATE — 6-30-21 REG. EXP.

REGISTERED PROFESSIONAL ENGINEER BRIAN DOWNING No. 17607 Exp. 06/30/21 ELECTRICAL STATE OF CALIFORNIA 09/15/20

The Holt Group, Inc.
ENGINEERING * SURVEYING * CONSTRUCTION MANAGEMENT * PLANNING
1601 N. IMPERIAL AVE. EL CENTRO, CA 92243 PHONE: (760) 337-3883 FAX: (760) 337-5997
201 E. HOBSONWAY BLYTHE, CA 92225 PHONE: (760) 922-4658 FAX: (760) 922-4660

PROJECT TITLE : CITY OF HOLTVILLE - WATER TREATMENT PLANT IMPROVEMENTS - CONTROL SYSTEM IMPROVEMENTS

PROJECT NUMBER : 116.455

SHEET CONTENT : ELECTRICAL SCHEDULES

SHEET NO. 21 OF 46 SHEETS

XREF: 1952_BDR

DWG FILE: X:\1900'S\1952.00 HOLTVILLE WTP CONTROLS SYSTEM UPGRADE RFP DEVELOPMENT\100 – E&I DESIGN_CAD FILES\1952.00.100_E004.DWG 3:31PM PLOTTED: Sep 15, 2020 jahrens

NOTES:

1. REFER TO STRUCTURAL/MECHANICAL DRAWINGS FOR GENERATOR PAD CONSTRUCTION DETAILS/REQUIREMENTS.
2. EXISTING GENERATOR AND ASSOCIATED PAD SHALL BE REMOVED. REMOVED GENERATOR SHALL BE TRANSPORTED TO AN OWNER DESIGNATED LOCATION WITHIN HOLTVILLE CITY LIMITS. PAD SHALL BE PROPERLY DISPOSED OF. AN ASSOCIATED CONSTRUCTION SEQUENCE SHALL BE PROVIDED TO OWNER AND ENGINEER FOR REVIEW AND APPROVAL PRIOR TO REMOVING EXISTING GENERATOR. ALL EFFORTS SHALL BE COORDINATED WITH OWNER.
3. CONDUIT ROUTING SHOWN IS APPROXIMATE, ACTUAL ROUTING SHALL BE FIELD DETERMINED BASED ON FIELD CONDITIONS. REFER TO CONDUIT BLOCK DIAGRAMS ON SHEETS E019 & E020 FOR SYSTEM CONDUIT INFORMATION/REQUIREMENTS (I.E. TO/FROM INFO, SIZES, TAG #'S, CONTENTS ETC.).
4. REFER TO MECHANICAL DRAWINGS FOR LOCATION OF THM AERATORS, MIXERS AND BLOWERS.

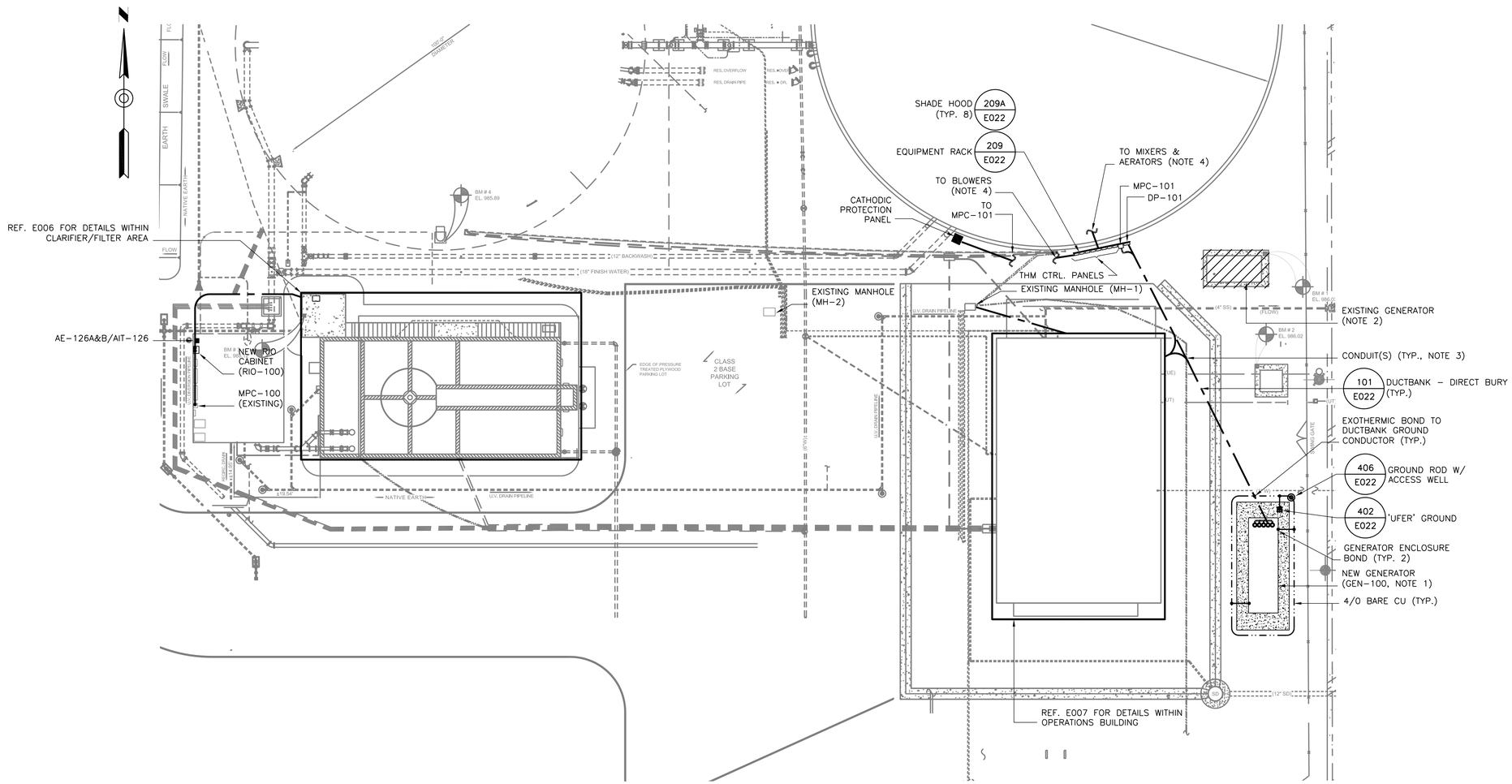

A ~ OVERALL SITE PLAN

16 12 8 4 0 8 16

SCALE: 1/16" = 1'-0"

DELTA SYSTEMS
202 E. EARLL DRIVE, SUITE 110
PHOENIX, AZ 85012 602.266.4658

E005

No.	REVISION	APPROVED	DATE

UNAUTHORIZED CHANGES AND USES: The engineer preparing these plans will not be responsible for, or liable for, unauthorized changes to or uses of these plans. All changes to these plans must be in writing and must be approved by the preparer of these plans.

DESIGNED BY: CW/DN	DRAWN BY: CW
SCALE: NTS	CHECKED BY: DN
BENCH MARK No.	ELEV.:

PREPARED UNDER THE DIRECT SUPERVISION OF:

BRIAN D. DOWNING — 17607 R.E.E. No.

09/15/2020 DATE — 6-30-21 REG. EXP.

REGISTERED PROFESSIONAL ENGINEER BRIAN DOWNING No. 17607 Exp. 06/30/21 ELECTRICAL STATE OF CALIFORNIA 09/15/20

The Holt Group, Inc.
ENGINEERING * SURVEYING * CONSTRUCTION MANAGEMENT * PLANNING
1601 N. IMPERIAL AVE. EL CENTRO, CA 92243 PHONE: (760) 337-3883 FAX: (760) 337-5997
201 E. HOBSONWAY BLYTHE, CA 92225 PHONE: (760) 922-4658 FAX: (760) 922-4660

PROJECT TITLE : CITY OF HOLTVILLE - WATER TREATMENT PLANT IMPROVEMENTS - CONTROL SYSTEM IMPROVEMENTS

PROJECT NUMBER : 116.455

SHEET CONTENT : OVERALL SITE PLAN

SHEET NO. 22 OF 46 SHEETS

XREF: 1952_BDR; NEW SITE PLAN

DWG FILE: X:\1900'S\1952.00 HOLTVILLE WTP CONTROLS SYSTEM UPGRADE RFP DEVELOPMENT\100 - E&I DESIGN_CAD FILES\1952.00.100_E005.DWG 3:32PM PLOTTED: Sep 15, 2020 jahrens

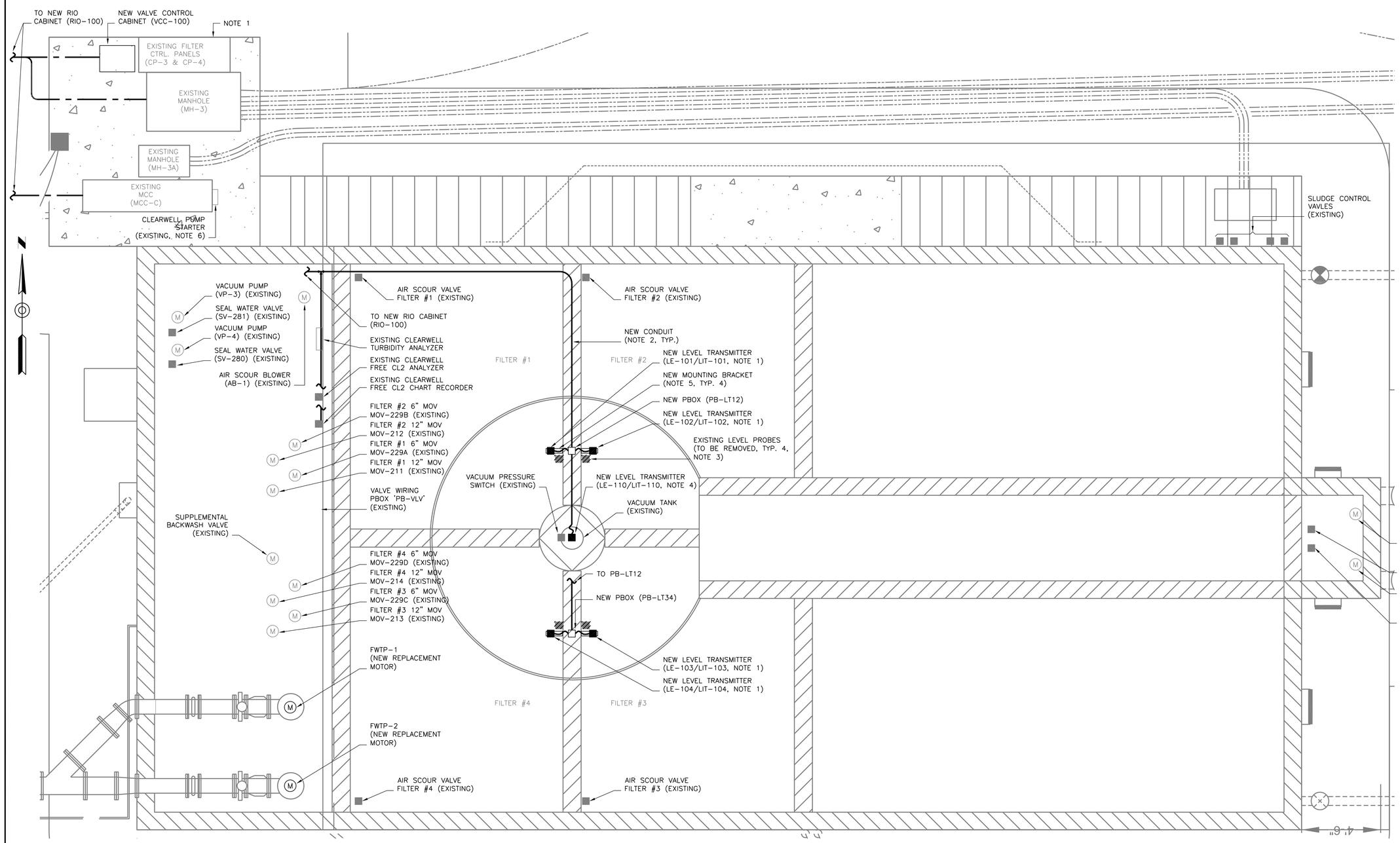

A ~ CLARIFIER/FILTER AREA PLAN

0 1' 2' 4'

SCALE: 3/8" = 1'-0"

NOTES:

1. EXISTING FILTER CONTROL CABINET ('CP-3'/'CP-4') SHALL BE CONVERTED TO AN ITBX TO FACILITATE TRANSITION OF EXISTING VALVE WIRING INTO NEW VALVE CONTROL CABINET. REFERENCE CORRESPONDING CONNECTION DIAGRAM FOR ADDITIONAL INFORMATION INCLUDING CABINET INTERCONNECTION WIRING REQUIREMENTS.
2. CONDUIT ROUTING SHOWN IS APPROXIMATE, ACTUAL ROUTING SHALL BE FIELD DETERMINED BASED ON FIELD CONDITIONS. REFER TO CONDUIT BLOCK DIAGRAMS ON SHEETS E019 & E020 FOR SYSTEM CONDUIT INFORMATION/REQUIREMENTS (I.E. TO/FROM INFO, SIZES, TAG #'S, CONTENTS ETC.).
3. EXISTING LEVEL PROBES, ASSOCIATED PULLBOXES, AND CONDUIT SEGMENTS FROM EXISTING PULLBOXES TO FIRST ENCOUNTERED 'T' FITTING SHALL BE REMOVED AND PROPERLY DISPOSED OF. UPON REMOVAL OF CONDUITS FROM 'T' FITTINGS ENSURE 'T' FITTINGS ARE PROPERLY SEALED SO AS TO ENSURE THEY REMAIN WEATHERTIGHT.
4. EXISTING LEVEL PROBE ASSEMBLY MOUNTED ON TOP OF EXISTING VACUUM TANK SHALL BE REMOVED. NEW LEVEL TRANSMITTER 'LE-110/LT-110' SHALL BE MOUNTED IN SAME LOCATION AS REMOVED PROBE(S) IN ACCORDANCE WITH MANUFACTURERS RECOMMENDATIONS.
5. UTILIZE 12" LONG ALUMINUM MOUNTING ARM ANCHORED TO CONCRETE FILTER WALL TO SUPPORT RADAR LEVEL TRANSMITTERS. TRANSMITTER MOUNTING LOCATION ON MOUNTING ARM SHALL BE PER LEVEL TRANSMITTER MANUFACTURER'S RECOMMENDATIONS.
6. EXISTING CLEARWELL PUMP STARTER LOCATED ON END OF MCC-C SHALL BE REMOVED AND PROPERLY DISPOSED OF. REPLACEMENT STARTER SHALL BE LOCATED INSIDE MCC, REFER TO DETAILS PROVIDED ELSEWHERE IN THIS DESIGN PACKAGE FOR STARTER REQUIREMENTS. A CONDUIT TRANSITION SHALL BE PROVIDED FROM MCC TO EXISTING CONDUIT CURRENTLY ROUTED TO CLEARWELL PUMP MOTOR TO FACILITATE ROUTING OF ASSOCIATED NEW MOTOR WIRIING.

DELTA SYSTEMS
202 E. EARLL DRIVE, SUITE 110
PHOENIX, AZ 85012 602.266.4658

E006

No.	REVISION	APPROVED	DATE

UNAUTHORIZED CHANGES AND USES: The engineer preparing these plans will not be responsible for, or liable for, unauthorized changes to or uses of these plans. All changes to these plans must be in writing and must be approved by the preparer of these plans.

DESIGNED BY: CW/DN	DRAWN BY: CW
SCALE: NTS	CHECKED BY: DN
BENCH MARK No.	ELEV.:

PREPARED UNDER THE DIRECT SUPERVISION OF:

BRIAN D. DOWNING — 17607 R.E.E. No.

09/15/2020 DATE — 6-30-21 REG. EXP.

REGISTERED PROFESSIONAL ENGINEER BRIAN DOWNING No. 17607 Exp. 06/30/21 ELECTRICAL STATE OF CALIFORNIA 09/15/20

The Holt Group, Inc.
ENGINEERING * SURVEYING * CONSTRUCTION MANAGEMENT * PLANNING
1601 N. IMPERIAL AVE. EL CENTRO, CA 92243 PHONE: (760) 337-3883 FAX: (760) 337-5997
201 E. HOBSONWAY BLYTHE, CA 92225 PHONE: (760) 922-4658 FAX: (760) 922-4660

PROJECT TITLE : CITY OF HOLTVILLE - WATER TREATMENT PLANT IMPROVEMENTS - CONTROL SYSTEM IMPROVEMENTS

PROJECT NUMBER : 116.455

SHEET CONTENT : CLARIFIER/FILTER AREA PLAN

SHEET NO. 23 OF 46 SHEETS

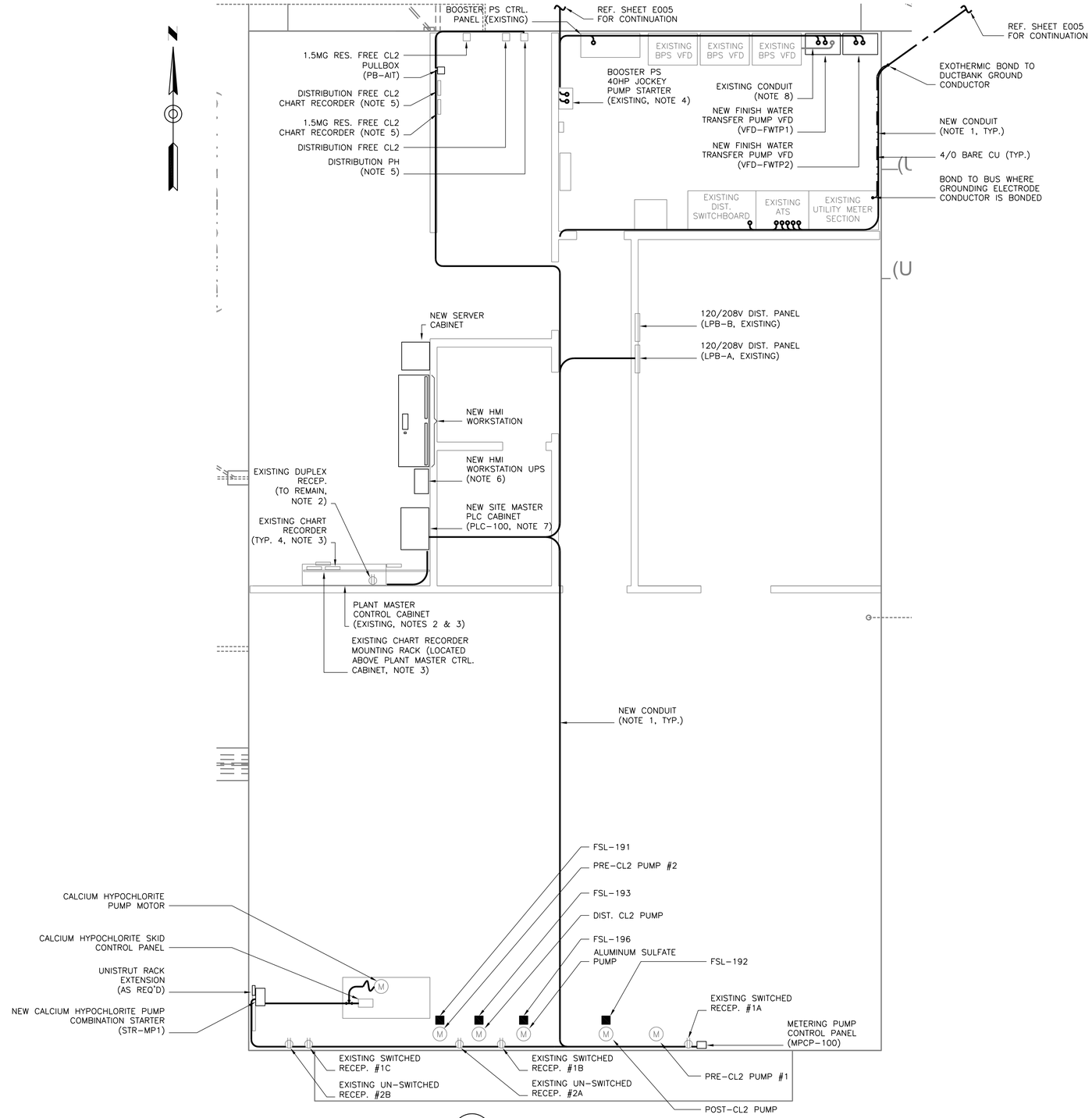

A OPERATIONS BUILDING PLAN

4 3 2 1 0 2 4

SCALE: 1/4" = 1'-0"

NOTES:

1. CONDUIT ROUTING SHOWN IS APPROXIMATE, ACTUAL ROUTING SHALL BE FIELD DETERMINED BASED ON FIELD CONDITIONS. REFER TO CONDUIT BLOCK DIAGRAMS ON SHEETS E019 & E020 FOR SYSTEM CONDUIT INFORMATION/REQUIREMENTS (I.E. TO/FROM INFO, SIZES, TAG #'S, CONTENTS ETC.).
2. EXISTING PLANT MASTER CONTROL CABINET SHALL BE TRANSITIONED INTO AN ITBX THAT WILL BE USED TO FACILITATE THE TRANSITION OF EXISTING SITE INSTRUMENTATION & CONTROL WIRING INTO NEW SITE MASTER PLC/RTU CABINET (RTU-100). REFER TO ASSOCIATED CONNECTION DIAGRAM ON SHEET E015 FOR INTERCONNECTION WIRING REQUIREMENTS. INSTALLATION OF TB'S IN PLANT MASTER CONTROL CABINET AND TRANSITIONING OF SIGNALS INTO NEW MAIN SITE PLC/RTU CABINET SHALL BE COORDINATED WITH OWNER SO AS TO ENSURE IMPACT TO PLANT OPERATIONS IS MINIMIZED. AFTER ALL EXISTING INSTRUMENTATION AND CONTROL WIRING HAS BEEN TRANSITIONED, EXISTING PLANT MASTER CONTROL CABINET SHALL HAVE ALL INTERNAL AND EXTERNAL (I.E. DOOR MOUNTED DEVICES) DEVICES REMOVED WITH EXCEPTION OF EXISTING DUPLEX RECEPTACLE, UPS (CURRENTLY PLUGGED INTO RECEPTACLE) AND EXISTING CHART RECORDERS WHICH SHALL REMAIN (OR BE RE-LOCATED AS INDICATED IN NOTE 3). CABINET DOORS SHALL BE REPLACED IF REPLACEMENT DOORS ARE AVAILABLE. IF REPLACEMENT DOORS ARE NOT AVAILABLE, ALL HOLES IN CABINET DOORS SHALL BE COVERED IN A MANNER THAT HAS BEEN APPROVED BY OWNER.
3. EXISTING CHART RECORDER MOUNTED ON END OF PLANT MASTER CONTROL CABINET AND CHART RECORDER MOUNTED IN PLANT MASTER CONTROL CABINET DOOR SHALL BE RELOCATED TO CHART RECORDER RACK ABOVE PLANT MASTER CONTROL CABINET WITH OTHER TWO EXISTING CHART RECORDERS CURRENTLY MOUNTED IN RACK. CHART RECORDERS SHALL BE POWERED VIA EXISTING CABINET UPS.
4. EXISTING STARTER ASSOCIATED WITH BOOSTER PUMP STATION JOCKEY PUMP SHALL BE RE-LOCATED FROM CURRENT LOCATION (EAST END OF EXISTING BOOSTER PUMP VFD STARTER) TO LOCATION SHOWN ON WEST WALL OF ELECTRICAL ROOM. MOTOR WIRING SHALL BE RE-ROUTED AS INDICATED ON CONDUIT BLOCK DIAGRAM. MOTOR START/STOP SIGNAL FROM BOOSTER PUMP STATION CONTROL PANEL SHALL BE RE-ROUTED ACCORDINGLY. REFER TO ASSOCIATED CONNECTION DIAGRAM FOR START/STOP SIGNAL WIRING REQUIREMENTS.
5. EXISTING 1.5MG RESERVOIR CL2 ANALYZER, ASSOCIATED CHART RECORDER, DISTRIBUTION CL2 ANALYZER, ASSOCIATED CHART RECORDER AND DISTRIBUTION pH ANALYZER SHALL REMAIN. ASSOCIATED 4-20mA SIGNALS SHALL BE ROUTED BACK TO NEW SITE MASTER PLC/RTU CABINET. REFER TO ASSOCIATED CONNECTION DIAGRAM FOR ASSOCIATED WIRING/INTERCONNECTION REQUIREMENTS.
6. HMI UPS SHALL BE PLUGGED INTO EXISTING DUPLEX RECEPTACLE TO WHICH EXISTING PC'S ARE PLUGGED INTO.
7. AN OPENING SHALL BE PROVIDED IN BACK OF NEW SITE MASTER PLC CABINET TO ALL ACCESS TO EXISTING ETHERNET WALL JACK (PROVIDES CONNECTION TO EXISTING WIRELESS ETHERNET RADIO THAT FACILITATES ETHERNET CONNECTION WITH PUBLIC WORKS BUILDING).
8. EXISTING CONDUIT CURRENTLY ROUTED BETWEEN EXISTING BPS VFD CABINET AND EXISTING CONDUIT STUB-UP LOCATED WHERE NEW VFD ('VFD-FWTP1) IS TO BE LOCATED SHALL BE REMOVED TO HELP FACILITATE INSTALLATION OF NEW VFD. UPON INSTALLATION OF NEW VFD, EXISTING WIRING ORIGINALLY ROUTED THROUGH REMOVED CONDUIT SHALL BE RE-ROUTED THROUGH NEW VFD CABINET TO ORIGINAL TERMINATION POINT(S).

DELTA SYSTEMS
202 E. EARLL DRIVE, SUITE 110
PHOENIX, AZ 85012 602.266.4658

E007

No.	REVISION	APPROVED	DATE

UNAUTHORIZED CHANGES AND USES: The engineer preparing these plans will not be responsible for, or liable for, unauthorized changes to or uses of these plans. All changes to these plans must be in writing and must be approved by the preparer of these plans.

DESIGNED BY: CW/DN	DRAWN BY: CW
SCALE: NTS	CHECKED BY: DN
BENCH MARK No.	ELEV.:

PREPARED UNDER THE DIRECT SUPERVISION OF:

BRIAN D. DOWNING — 17607 R.E.E. No.

09/15/2020 DATE — 6-30-21 REG. EXP.

REGISTERED PROFESSIONAL ENGINEER BRIAN DOWNING No. 17607 Exp. 06/30/21 ELECTRICAL STATE OF CALIFORNIA 09/15/20

The Holt Group, Inc.
ENGINEERING * SURVEYING * CONSTRUCTION MANAGEMENT * PLANNING
1601 N. IMPERIAL AVE. EL CENTRO, CA 92243 PHONE: (760) 337-3883 FAX: (760) 337-5997
201 E. HOBSONWAY BLYTHE, CA 92225 PHONE: (760) 922-4658 FAX: (760) 922-4660

PROJECT TITLE : CITY OF HOLTVILLE - WATER TREATMENT PLANT IMPROVEMENTS - CONTROL SYSTEM IMPROVEMENTS

PROJECT NUMBER : 116.455

SHEET CONTENT : OPERATIONS BUILDING PLAN

SHEET NO. 24 OF 46 SHEETS

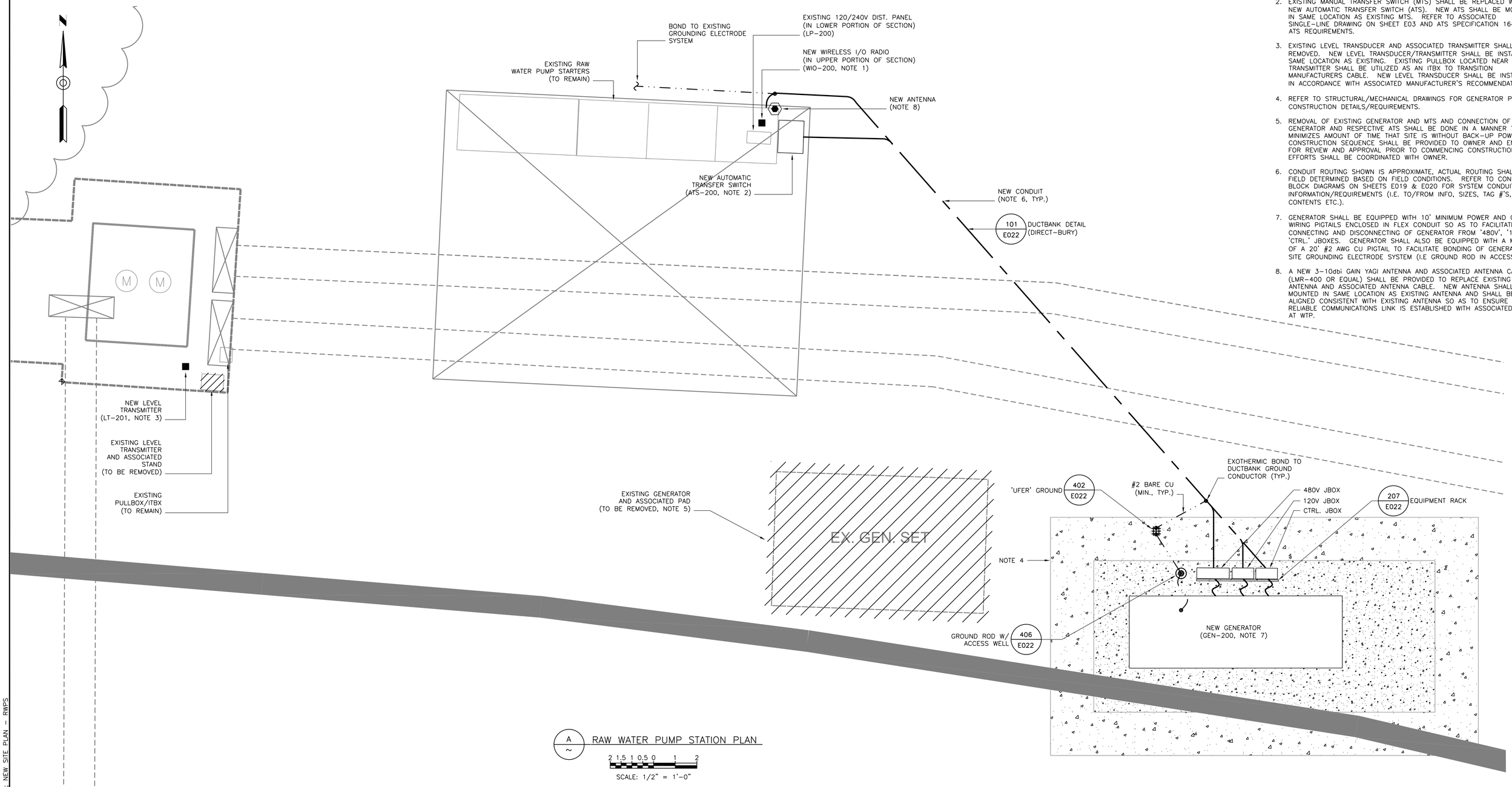

A ~ RAW WATER PUMP STATION PLAN

2 1.5 1 0.5 0 1 2

SCALE: 1/2" = 1'-0"

NOTES:

1. EXISTING WIRELESS I/O MODULE SHALL BE REPLACED WITH A NEW WIRELESS I/O MODULE AS DETAILED ELSEWHERE IN THIS DESIGN PACKAGE.
2. EXISTING MANUAL TRANSFER SWITCH (MTS) SHALL BE REPLACED WITH A NEW AUTOMATIC TRANSFER SWITCH (ATS). NEW ATS SHALL BE MOUNTED IN SAME LOCATION AS EXISTING MTS. REFER TO ASSOCIATED SINGLE-LINE DRAWING ON SHEET E03 AND ATS SPECIFICATION 16495 FOR ATS REQUIREMENTS.
3. EXISTING LEVEL TRANSDUCER AND ASSOCIATED TRANSMITTER SHALL BE REMOVED. NEW LEVEL TRANSDUCER/TRANSMITTER SHALL BE INSTALLED IN SAME LOCATION AS EXISTING. EXISTING PULLBOX LOCATED NEAR LEVEL TRANSMITTER SHALL BE UTILIZED AS AN ITBX TO TRANSITION MANUFACTURERS CABLE. NEW LEVEL TRANSDUCER SHALL BE INSTALLED IN ACCORDANCE WITH ASSOCIATED MANUFACTURER'S RECOMMENDATIONS.
4. REFER TO STRUCTURAL/MECHANICAL DRAWINGS FOR GENERATOR PAD CONSTRUCTION DETAILS/REQUIREMENTS.
5. REMOVAL OF EXISTING GENERATOR AND MTS AND CONNECTION OF NEW GENERATOR AND RESPECTIVE ATS SHALL BE DONE IN A MANNER THAT MINIMIZES AMOUNT OF TIME THAT SITE IS WITHOUT BACK-UP POWER. A CONSTRUCTION SEQUENCE SHALL BE PROVIDED TO OWNER AND ENGINEER FOR REVIEW AND APPROVAL PRIOR TO COMMENCING CONSTRUCTION. ALL EFFORTS SHALL BE COORDINATED WITH OWNER.
6. CONDUIT ROUTING SHOWN IS APPROXIMATE, ACTUAL ROUTING SHALL BE FIELD DETERMINED BASED ON FIELD CONDITIONS. REFER TO CONDUIT BLOCK DIAGRAMS ON SHEETS E019 & E020 FOR SYSTEM CONDUIT INFORMATION/REQUIREMENTS (I.E. TO/FROM INFO, SIZES, TAG #'S, CONTENTS ETC.).
7. GENERATOR SHALL BE EQUIPPED WITH 10' MINIMUM POWER AND CONTROL WIRING PIGTAILS ENCLOSED IN FLEX CONDUIT SO AS TO FACILITATE CONNECTING AND DISCONNECTING OF GENERATOR FROM '480V', '120V' & 'CTRL.' JBOXES. GENERATOR SHALL ALSO BE EQUIPPED WITH A MINIMUM OF A 20' #2 AWG CU PIGTAIL TO FACILITATE BONDING OF GENERATOR TO SITE GROUNDING ELECTRODE SYSTEM (I.E GROUND ROD IN ACCESS WELL).
8. A NEW 3-10dbi GAIN YAGI ANTENNA AND ASSOCIATED ANTENNA CABLE (LMR-400 OR EQUAL) SHALL BE PROVIDED TO REPLACE EXISTING ANTENNA AND ASSOCIATED ANTENNA CABLE. NEW ANTENNA SHALL BE MOUNTED IN SAME LOCATION AS EXISTING ANTENNA AND SHALL BE ALIGNED CONSISTENT WITH EXISTING ANTENNA SO AS TO ENSURE A RELIABLE COMMUNICATIONS LINK IS ESTABLISHED WITH ASSOCIATED RADIO AT WTP.

DELTA SYSTEMS
202 E. EARLL DRIVE, SUITE 110
PHOENIX, AZ 85012 602.266.4658

E008

No.	REVISION	APPROVED	DATE

UNAUTHORIZED CHANGES AND USES: The engineer preparing these plans will not be responsible for, or liable for, unauthorized changes to or uses of these plans. All changes to these plans must be in writing and must be approved by the preparer of these plans.

DESIGNED BY: CW/DN	DRAWN BY: CW
SCALE:NTS	CHECKED BY: DN
BENCH MARK No.	ELEV.:

PREPARED UNDER THE DIRECT SUPERVISION OF:

BRIAN D. DOWNING — 17607 R.E.E. No.

09/15/2020 DATE — 6-30-21 REG. EXP.

REGISTERED PROFESSIONAL ENGINEER BRIAN DOWNING No. 17607 Exp. 06/30/21 ELECTRICAL STATE OF CALIFORNIA 09/15/20

The Holt Group, Inc.
ENGINEERING * SURVEYING * CONSTRUCTION MANAGEMENT * PLANNING
1601 N. IMPERIAL AVE. EL CENTRO, CA 92243 PHONE: (760) 337-3883 FAX: (760) 337-5997
201 E. HOBSONWAY BLYTHE, CA 92225 PHONE: (760) 922-4658 FAX: (760) 922-4660

PROJECT TITLE : CITY OF HOLTVILLE - WATER TREATMENT PLANT IMPROVEMENTS - CONTROL SYSTEM IMPROVEMENTS

PROJECT NUMBER : 116.455

SHEET CONTENT : RAW WATER PUMP STATION ELECTRICAL PLAN

SHEET NO. 25 OF 46 SHEETS

NOTES:

1. TYPICAL SCHEMATIC DIAGRAMS ARE INTENDED TO REFLECT THE GENERAL CONTROL STRATEGY. ACTUAL CIRCUITRY MAY VARY FOR SPECIFIC EQUIPMENT SUPPLIED. THE NUMBER AND TYPE OF DEVICES SHALL BE FURNISHED AS REQUIRED FOR PROPER OPERATION OF THE EQUIPMENT.
2. CONTROL POWER TRANSFORMERS (CPT) SHALL BE ADEQUATELY SIZED AND SHALL BE PROVIDED WITH PROPERLY SIZED FUSES FOR BOTH THE PRIMARY AND SECONDARY WINDINGS.
3. CONNECTIONS SHOWN TO PLC INPUTS AND OUTPUTS ARE SHOWN IN A SIMPLIFIED CONCEPTUAL MANNER.
4. REFERENCE SHEET E004 FOR MASTER CIRCUIT SCHEDULE.

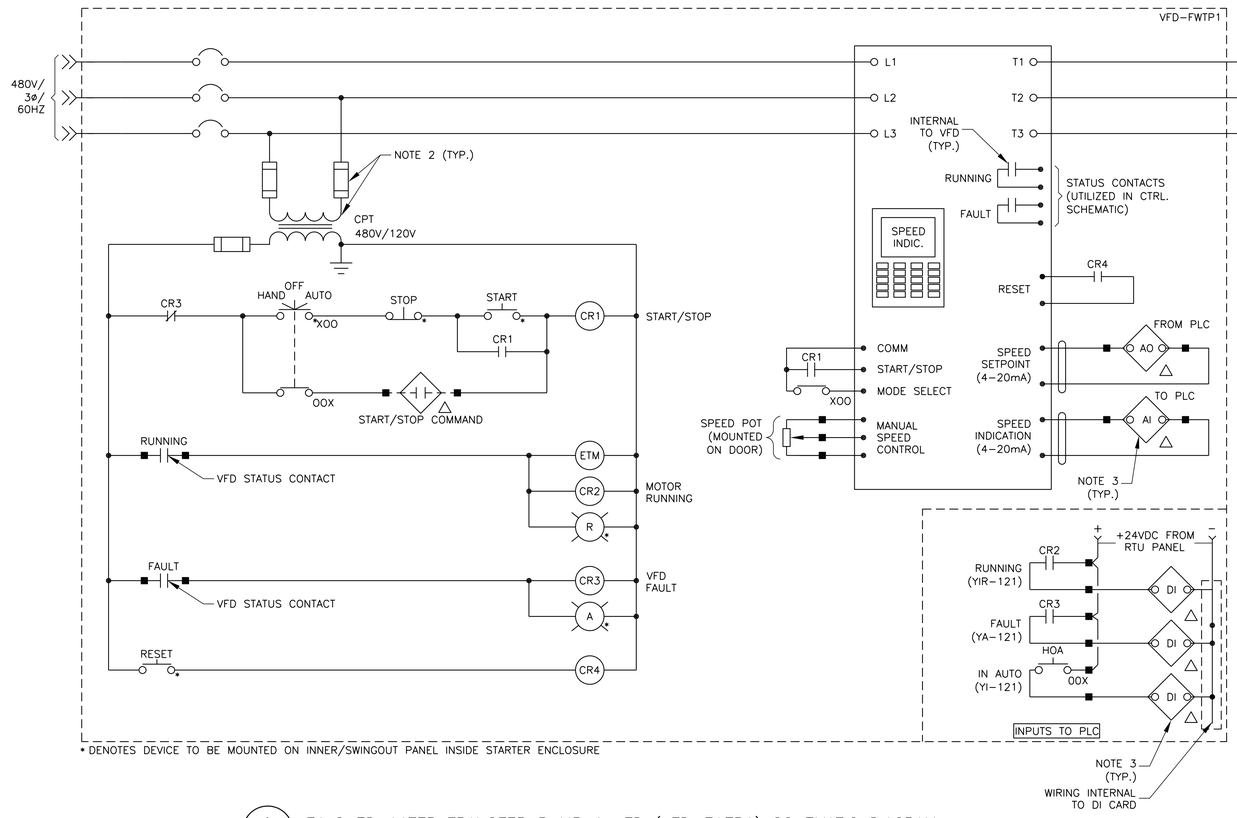

A ~ FINISHED WATER TRANSFER PUMP 1 VFD (VFD-FWTP1) SCHEMATIC DIAGRAM

SCHEMATIC
TYPICAL FOR VFD-FWTP2

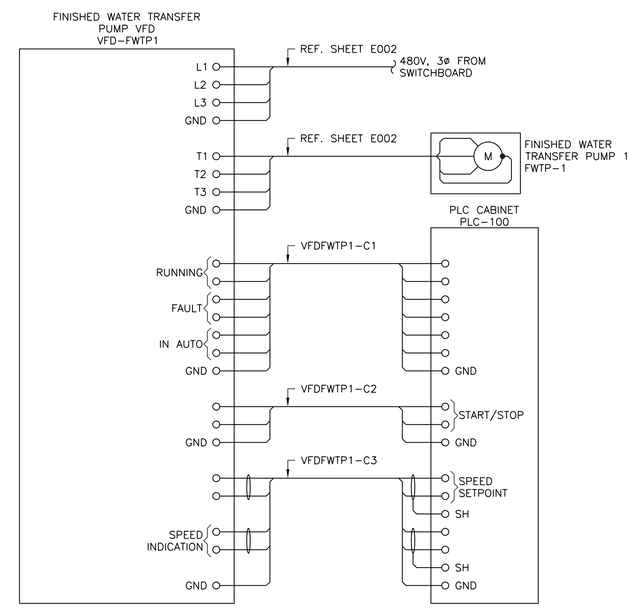

B ~ FINISHED WATER TRANSFER PUMP 1 VFD (VFD-FWTP1) CONNECTION DIAGRAM

CONNECTION
TYPICAL FOR VFD-FWTP2

DELTA SYSTEMS
202 E. EARLL DRIVE, SUITE 110
PHOENIX, AZ 85012 602.266.4658

E009

No.	REVISION	APPROVED	DATE

UNAUTHORIZED CHANGES AND USES: The engineer preparing these plans will not be responsible for, or liable for, unauthorized changes to or uses of these plans. All changes to these plans must be in writing and must be approved by the preparer of these plans.

DESIGNED BY: CW/DN	DRAWN BY: CW
SCALE:NTS	CHECKED BY: DN
BENCH MARK No.	ELEV.:

PREPARED UNDER THE DIRECT SUPERVISION OF:

BRIAN D. DOWNING — 17607 R.E.E. No.

09/15/2020 DATE — 6-30-21 REG. EXP.

REGISTERED PROFESSIONAL ENGINEER BRIAN DOWNING No. 17607 Exp. 06/30/21 ELECTRICAL STATE OF CALIFORNIA 09/15/20

The Holt Group, Inc.
ENGINEERING * SURVEYING * CONSTRUCTION MANAGEMENT * PLANNING
1601 N. IMPERIAL AVE. EL CENTRO, CA 92243 PHONE: (760) 337-3883 FAX: (760) 337-5997
201 E. HOBSONWAY BLYTHE, CA 92225 PHONE: (760) 922-4658 FAX: (760) 922-4660

PROJECT TITLE : CITY OF HOLTVILLE - WATER TREATMENT PLANT IMPROVEMENTS - CONTROL SYSTEM IMPROVEMENTS

PROJECT NUMBER : 116.455

SHEET CONTENT : FINISHED WATER PUMP SCHEMATIC/CONNECTION DIAGRAM

SHEET NO. 26 OF 46 SHEETS

XREF: 1952_BDR

DWG FILE: X:\1900'S\1952.00 HOLTVILLE WTP CONTROLS SYSTEM UPGRADE RFP DEVELOPMENT\100 - E&I DESIGN_CAD FILES\1952.00.100_E009.DWG 3:34PM PLOTTED: Sep 15, 2020 johrens

NOTES:

1. TYPICAL SCHEMATIC DIAGRAMS ARE INTENDED TO REFLECT THE GENERAL CONTROL STRATEGY. ACTUAL CIRCUITRY MAY VARY FOR SPECIFIC EQUIPMENT SUPPLIED. THE NUMBER AND TYPE OF DEVICES SHALL BE FURNISHED AS REQUIRED FOR PROPER OPERATION OF THE EQUIPMENT.
2. CONTROL POWER TRANSFORMERS (CPT) SHALL BE ADEQUATELY SIZED AND SHALL BE PROVIDED WITH PROPERLY SIZED FUSES FOR BOTH THE PRIMARY AND SECONDARY WINDINGS.
3. CONNECTIONS SHOWN TO PLC INPUTS AND OUTPUTS ARE SHOWN IN A SIMPLIFIED CONCEPTUAL MANNER.
4. REFERENCE SHEET E004 FOR MASTER CIRCUIT SCHEDULE.
5. INSTALL NEW 20A/2P BREAKER INSIDE EXISTING PANEL 'LPB-A' TO PROVIDE POWER TO CALCIUM HYPOCHLORITE PUMP STARTER 'STR-MP1'. UPDATE PANEL SCHEDULE ACCORDINGLY.

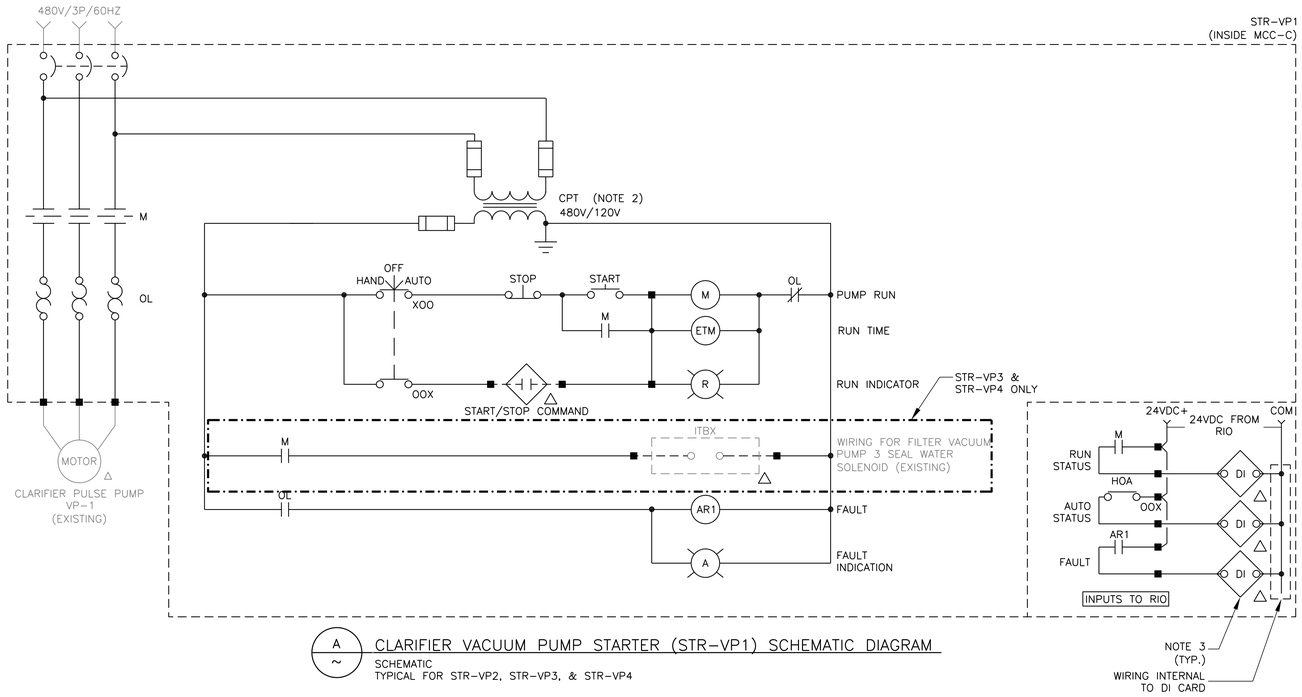

A ~ CLARIFIER VACUUM PUMP STARTER (STR-VP1) SCHEMATIC DIAGRAM

SCHEMATIC
TYPICAL FOR STR-VP2, STR-VP3, & STR-VP4

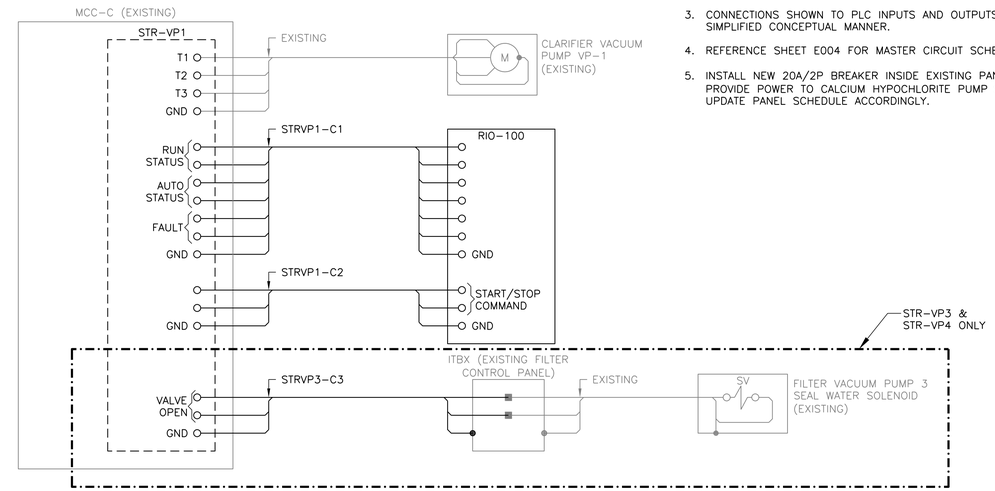

B ~ CLARIFIER VACUUM PUMP STARTER (STR-VP1) CONNECTION DIAGRAM

CONNECTION
TYPICAL FOR STR-VP2, STR-VP3, & STR-VP4

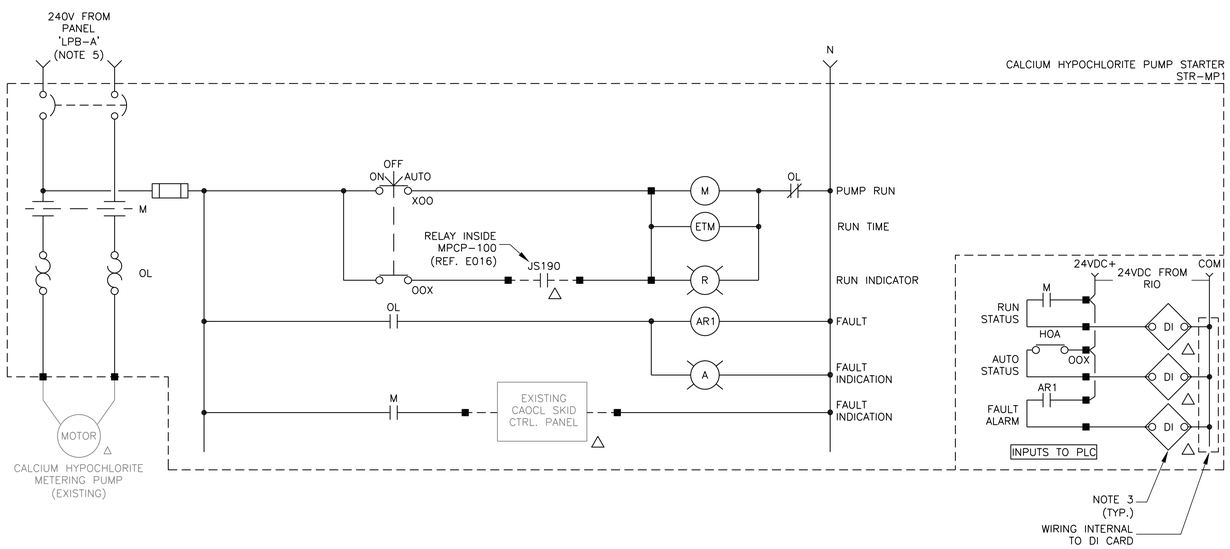

C ~ CALCIUM HYPOCHLORITE METERING PUMP STARTER (STR-MP1) SCHEMATIC DIAGRAM

SCHEMATIC

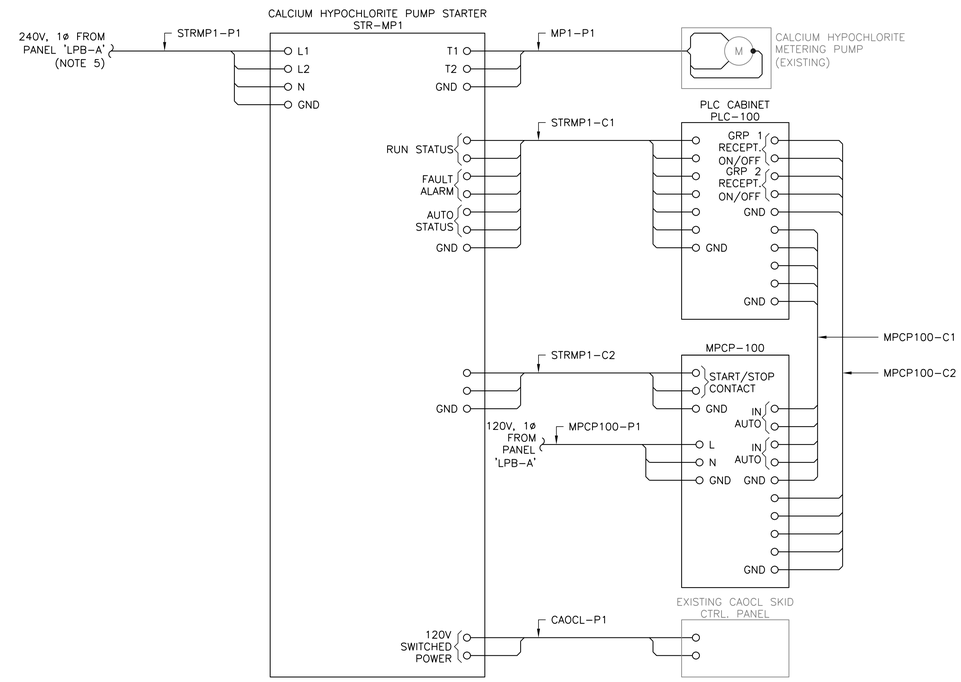

D ~ CALCIUM HYPOCHLORITE METERING PUMP STARTER (STR-MP1) CONNECTION DIAGRAM

CONNECTION

E010

DELTA SYSTEMS
202 E. EARLL DRIVE, SUITE 110
PHOENIX, AZ 85012 602.266.4658

No.	REVISION	APPROVED	DATE

UNAUTHORIZED CHANGES AND USES: The engineer preparing these plans will not be responsible for, or liable for, unauthorized changes to or uses of these plans. All changes to these plans must be in writing and must be approved by the preparer of these plans.

DESIGNED BY: CW/DN	DRAWN BY: CW
SCALE:NTS	CHECKED BY: DN
BENCH MARK No.	ELEV.:

PREPARED UNDER THE DIRECT SUPERVISION OF:

BRIAN D. DOWNING — 17607 R.E.E. No.

09/15/2020 DATE — 6-30-21 REG. EXP.

REGISTERED PROFESSIONAL ENGINEER BRIAN DOWNING No. 17607 Exp. 06/30/21 ELECTRICAL STATE OF CALIFORNIA 09/15/20

The Holt Group, Inc.
ENGINEERING * SURVEYING * CONSTRUCTION MANAGEMENT * PLANNING
1601 N. IMPERIAL AVE. EL CENTRO, CA 92243 PHONE: (760) 337-3883 FAX: (760) 337-5997
201 E. HOBSONWAY BLYTHE, CA 92225 PHONE: (760) 922-4658 FAX: (760) 922-4660

PROJECT TITLE : CITY OF HOLTVILLE - WATER TREATMENT PLANT IMPROVEMENTS - CONTROL SYSTEM IMPROVEMENTS

PROJECT NUMBER : 116.455

SHEET CONTENT : VACUUM PUMPS & CALCIUM HYPOCHLORITE METERING PUMP SCHEMATIC/CONNECTION DIAGRAMS

SHEET NO. 27 OF 46 SHEETS

XREF: 1952_BDR

DWG FILE: X:\1900'S\1952.00 HOLTVILLE WTP CONTROLS SYSTEM UPGRADE RFP DEVELOPMENT\100 - E&I DESIGN_CAD FILES\1952.00.100_E010.DWG 3:34PM PLOTTED: Sep 15, 2020 jahrens

NOTES:

1. CONNECTIONS SHOWN TO PLC INPUTS AND OUTPUTS ARE SHOWN IN A SIMPLIFIED CONCEPTUAL MANNER.
2. REFERENCE SHEET E004 FOR MASTER CIRCUIT SCHEDULE.
3. REUTILIZE EXISTING 20A CIRCUIT IN EXISTING LIGHTING PANEL CURRENTLY FEEDING EXISTING GENERATOR TO FEED NEW GENERATOR 'GEN-200'.

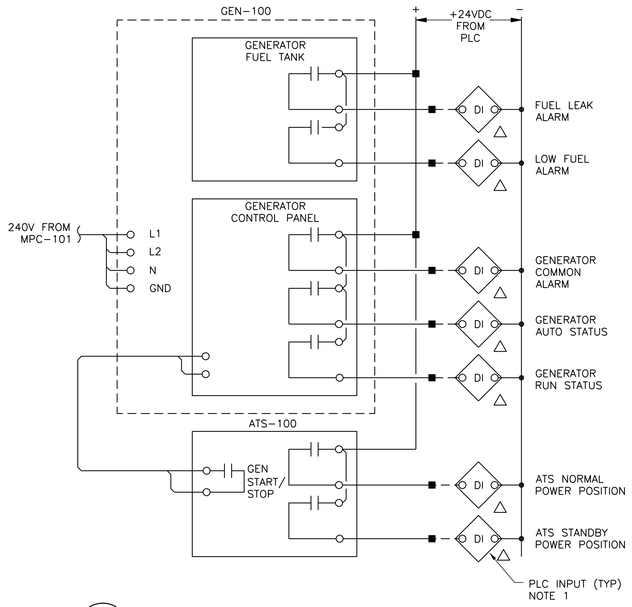

A ~ STANDBY WTP SCHEMATIC (GEN-100)
SCHEMATIC

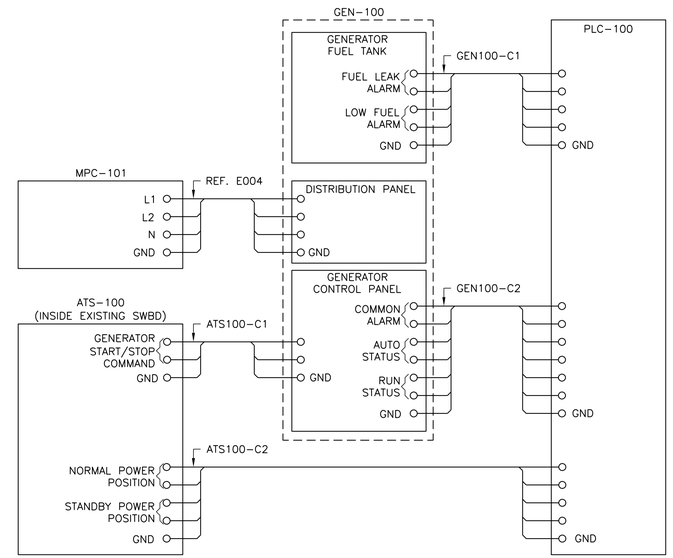

B ~ STANDBY WTP CONNECTION (GEN-100)
CONNECTION

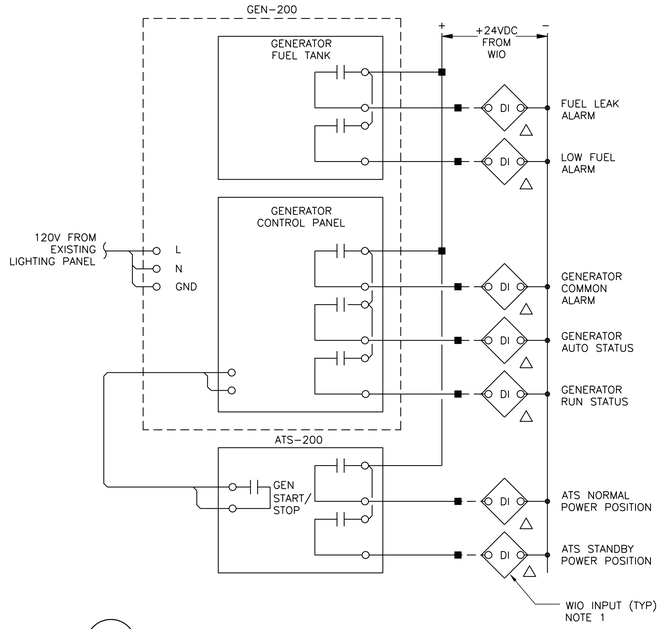

C ~ STANDBY WATER POND GENERATOR SCHEMATIC (GEN-200)
SCHEMATIC

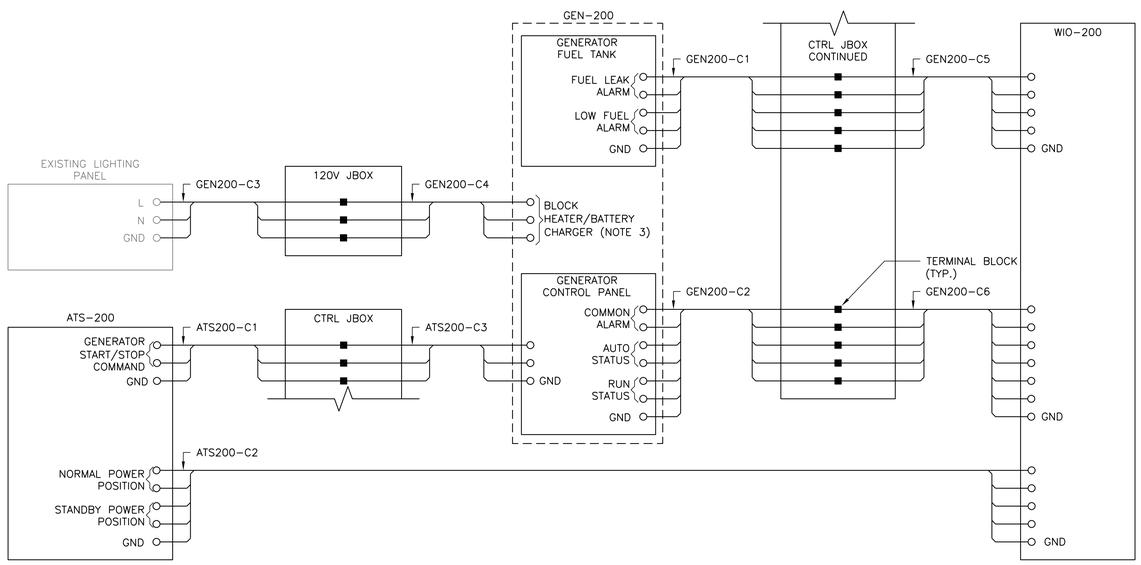

D ~ STANDBY WATER POND GENERATOR CONNECTION (GEN-200)
CONNECTION

DELTA SYSTEMS
202 E. EARLL DRIVE, SUITE 110
PHOENIX, AZ 85012 602.266.4658

E011

No.	REVISION	APPROVED	DATE

UNAUTHORIZED CHANGES AND USES: The engineer preparing these plans will not be responsible for, or liable for, unauthorized changes to or uses of these plans. All changes to these plans must be in writing and must be approved by the preparer of these plans.

DESIGNED BY: CW/DN	DRAWN BY: CW
SCALE:NTS	CHECKED BY: DN
BENCH MARK No.	ELEV.:

PREPARED UNDER THE DIRECT SUPERVISION OF:

BRIAN D. DOWNING — 17607 R.E.E. No.

09/15/2020 DATE — 6-30-21 REG. EXP.

REGISTERED PROFESSIONAL ENGINEER BRIAN DOWNING No. 17607 Exp. 06/30/21 ELECTRICAL STATE OF CALIFORNIA 09/15/20

The Holt Group, Inc.
ENGINEERING * SURVEYING * CONSTRUCTION MANAGEMENT * PLANNING
1601 N. IMPERIAL AVE. EL CENTRO, CA 92243 PHONE: (760) 337-3883 FAX: (760) 337-5997
201 E. HOBSONWAY BLYTHE, CA 92225 PHONE: (760) 922-4658 FAX: (760) 922-4660

PROJECT TITLE : CITY OF HOLTVILLE - WATER TREATMENT PLANT IMPROVEMENTS - CONTROL SYSTEM IMPROVEMENTS

PROJECT NUMBER : 116.455

SHEET CONTENT : GENERATOR SCHEMATIC/CONNECTION DIAGRAM

SHEET NO. 28 OF 46 SHEETS

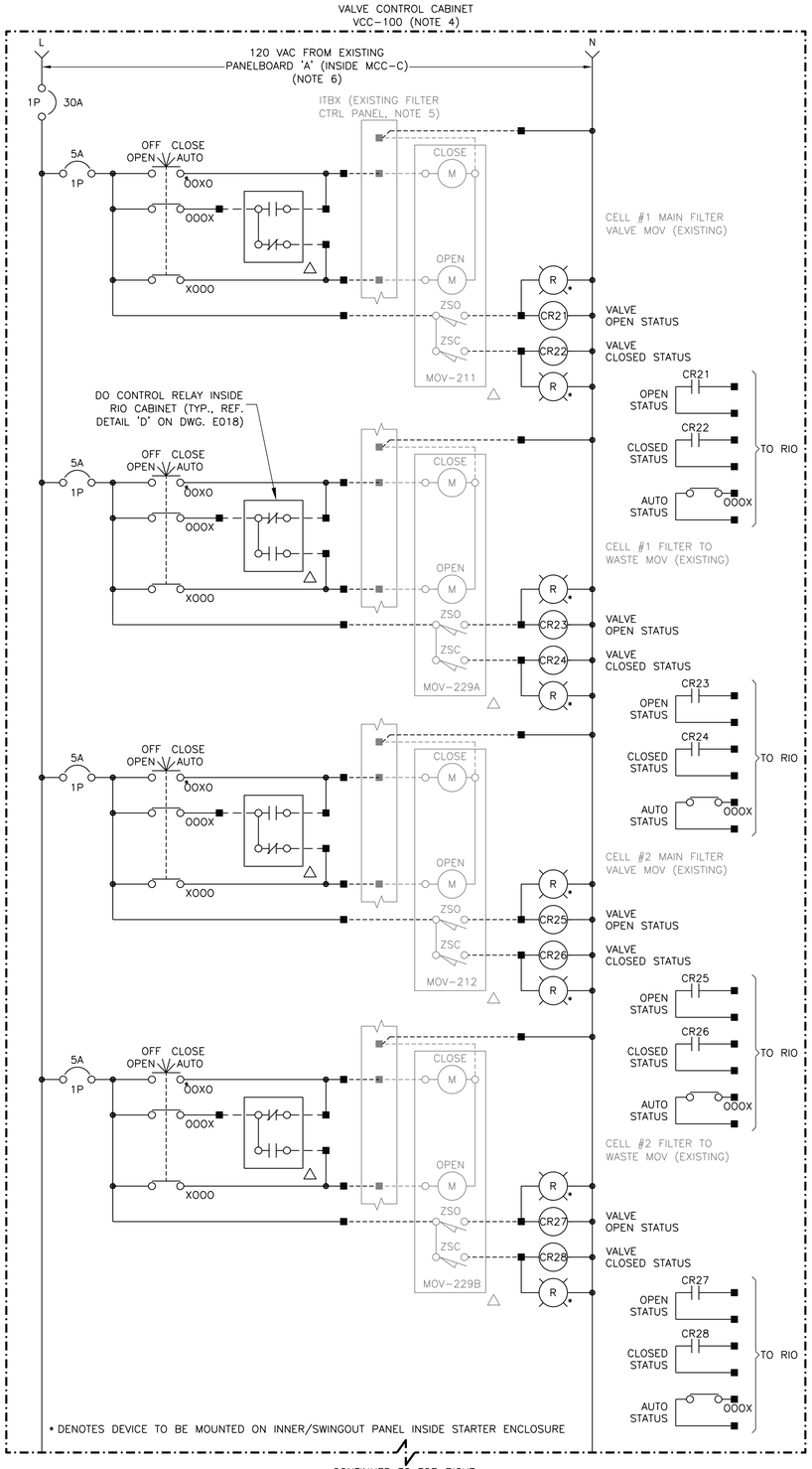

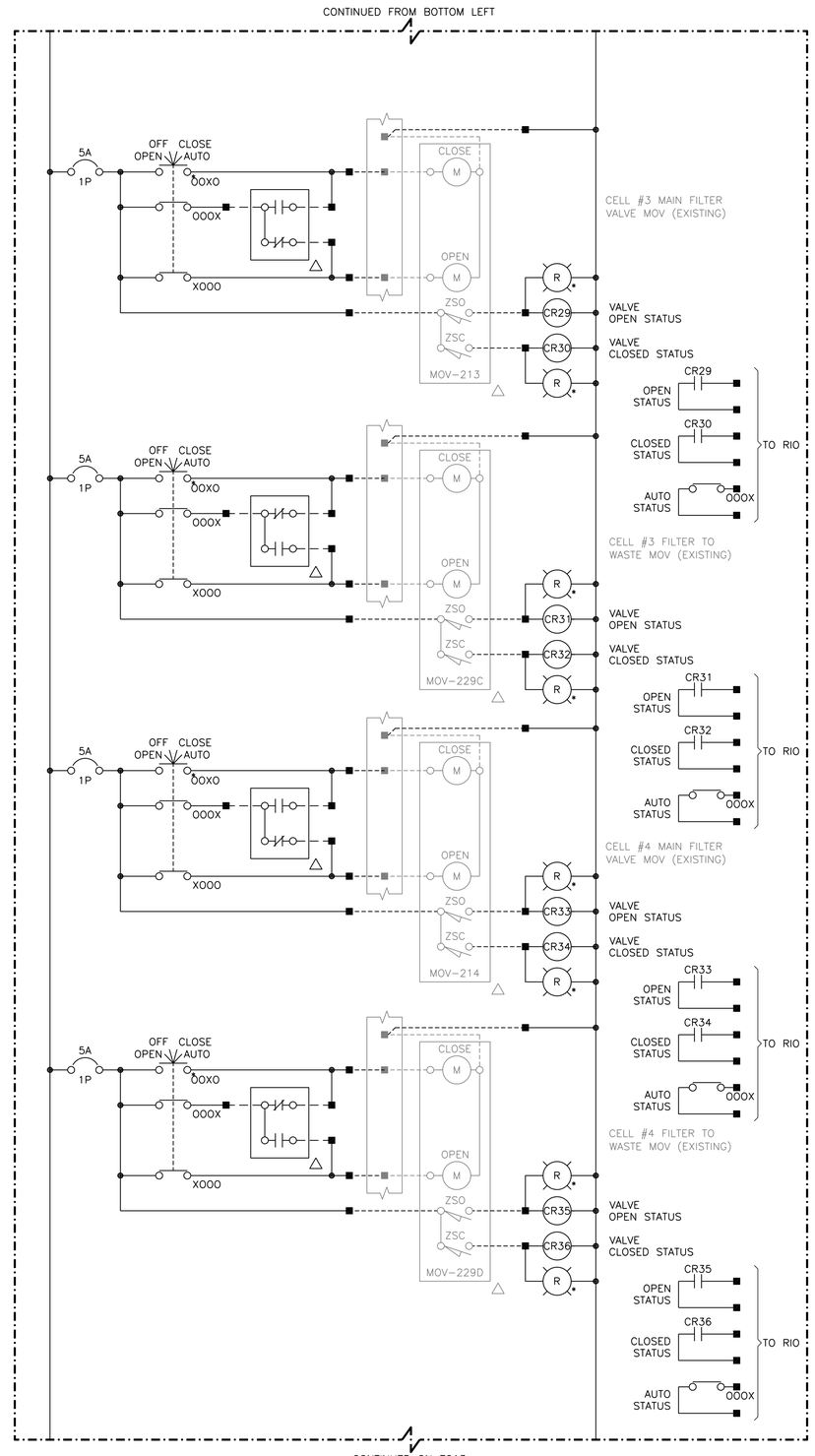

NOTES:

1. TYPICAL SCHEMATIC DIAGRAMS ARE INTENDED TO REFLECT THE GENERAL CONTROL STRATEGY. ACTUAL CIRCUITRY MAY VARY FOR SPECIFIC EQUIPMENT SUPPLIED. THE NUMBER AND TYPE OF DEVICES SHALL BE FURNISHED AS REQUIRED FOR PROPER OPERATION OF THE EQUIPMENT.
2. CONNECTIONS SHOWN TO PLC INPUTS AND OUTPUTS ARE SHOWN IN A SIMPLIFIED CONCEPTUAL MANNER.
3. REFERENCE SHEET E004 FOR MASTER CIRCUIT SCHEDULE.
4. VALVE CONTROL CABINET SHALL BE A FLOOR MOUNTED, NEMA 4 ENCLOSURE, SIZE AS REQUIRED. ALL SELECTOR SWITCHES AND INDICATOR LIGHTS SHALL BE MOUNTED ON A SWINGOUT PANEL LOCATED INSIDE CABINET. CABINET SHALL BE EQUIPPED WITH A LOCKABLE HANDLE.
5. EXISTING FILTER CONTROL CABINET SHALL BE CONVERTED TO AN ITBX. REMOVE ALL INDICATOR LIGHTS, SWITCHES, ETC. AND COVER HOLES IN A WEATHERPROOF MANNER.
6. INSTALL NEW 30A/1P BREAKER INSIDE EXISTING PANELBOARD 'A' TO PROVIDE POWER TO NEW VALVE CONTROL CABINET 'VCC-100'.

A ~ VALVE CONTROL CABINET (VCC-100) SCHEMATIC
SCHEMATIC

E012

DELTA SYSTEMS
202 E. EARLL DRIVE, SUITE 110
PHOENIX, AZ 85012 602.266.4658

No.	REVISION	APPROVED	DATE

UNAUTHORIZED CHANGES AND USES: The engineer preparing these plans will not be responsible for, or liable for, unauthorized changes to or uses of these plans. All changes to these plans must be in writing and must be approved by the preparer of these plans.

DESIGNED BY: CW/DN	DRAWN BY: CW
SCALE:NTS	CHECKED BY: DN
BENCH MARK No.	ELEV.:

PREPARED UNDER THE DIRECT SUPERVISION OF:

BRIAN D. DOWNING — 17607 R.E.E. No.

09/15/2020 DATE — 6-30-21 REG. EXP.

REGISTERED PROFESSIONAL ENGINEER BRIAN DOWNING No. 17607 Exp. 06/30/21 ELECTRICAL STATE OF CALIFORNIA 09/15/20

The Holt Group, Inc.
ENGINEERING * SURVEYING * CONSTRUCTION MANAGEMENT * PLANNING
1601 N. IMPERIAL AVE. EL CENTRO, CA 92243 PHONE: (760) 337-3883 FAX: (760) 337-5997
201 E. HOBSONWAY BLYTHE, CA 92225 PHONE: (760) 922-4658 FAX: (760) 922-4660

PROJECT TITLE : CITY OF HOLTVILLE - WATER TREATMENT PLANT IMPROVEMENTS - CONTROL SYSTEM IMPROVEMENTS

PROJECT NUMBER : 116.455

SHEET CONTENT : VALVE CONTROL CABINET SCHEMATIC DIAGRAM - SHEET 1

SHEET NO. 29 OF 46 SHEETS

XREF: 1952_BDR

NOTES:

1. CONNECTIONS SHOWN TO PLC INPUTS AND OUTPUTS ARE SHOWN IN A SIMPLIFIED CONCEPTUAL MANNER.
2. REFERENCE SHEET E004 FOR MASTER CIRCUIT SCHEDULE.

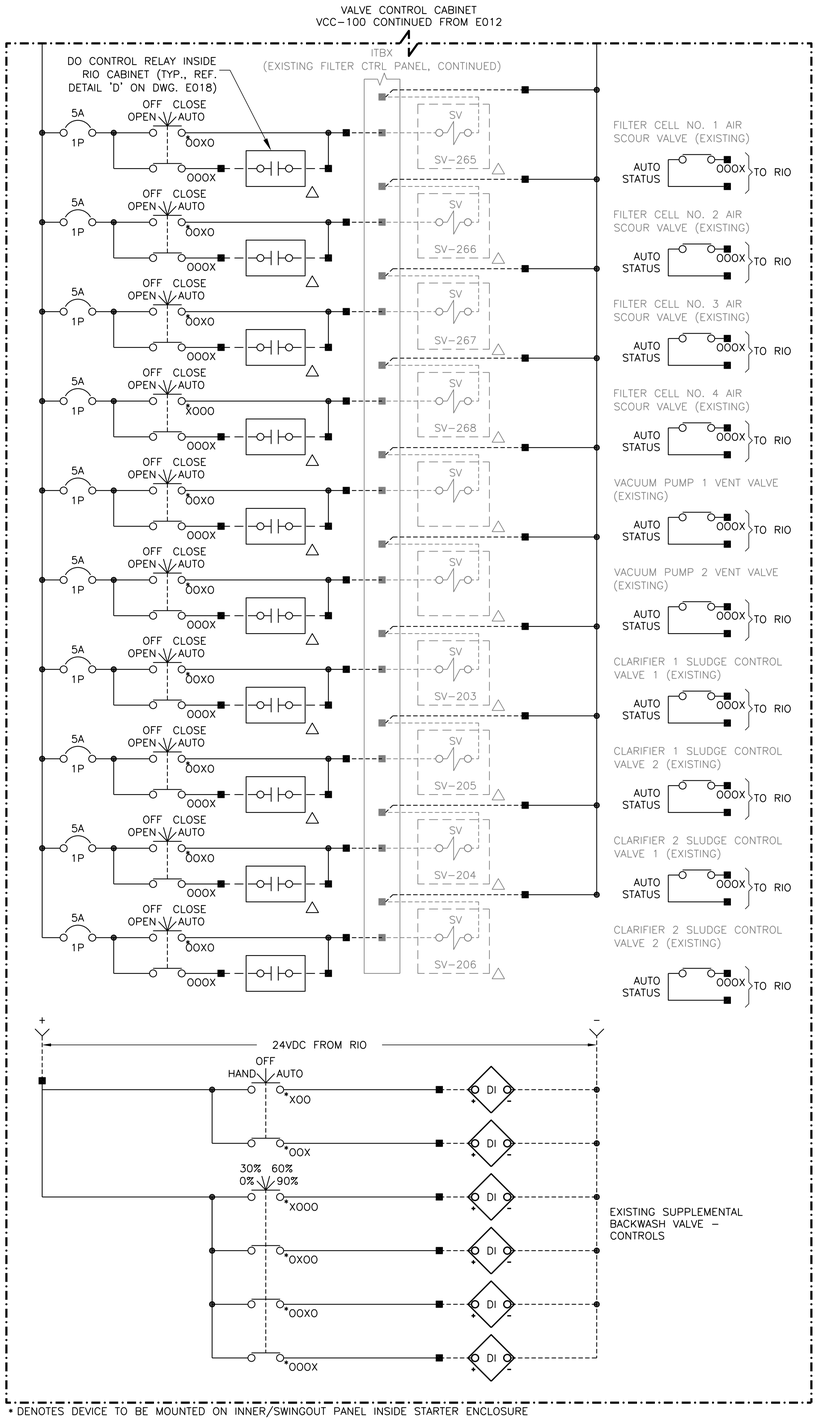

A ~ VALVE CONTROL CABINET (VCC-100) SCHEMATIC (CONTINUED)
SCHEMATIC

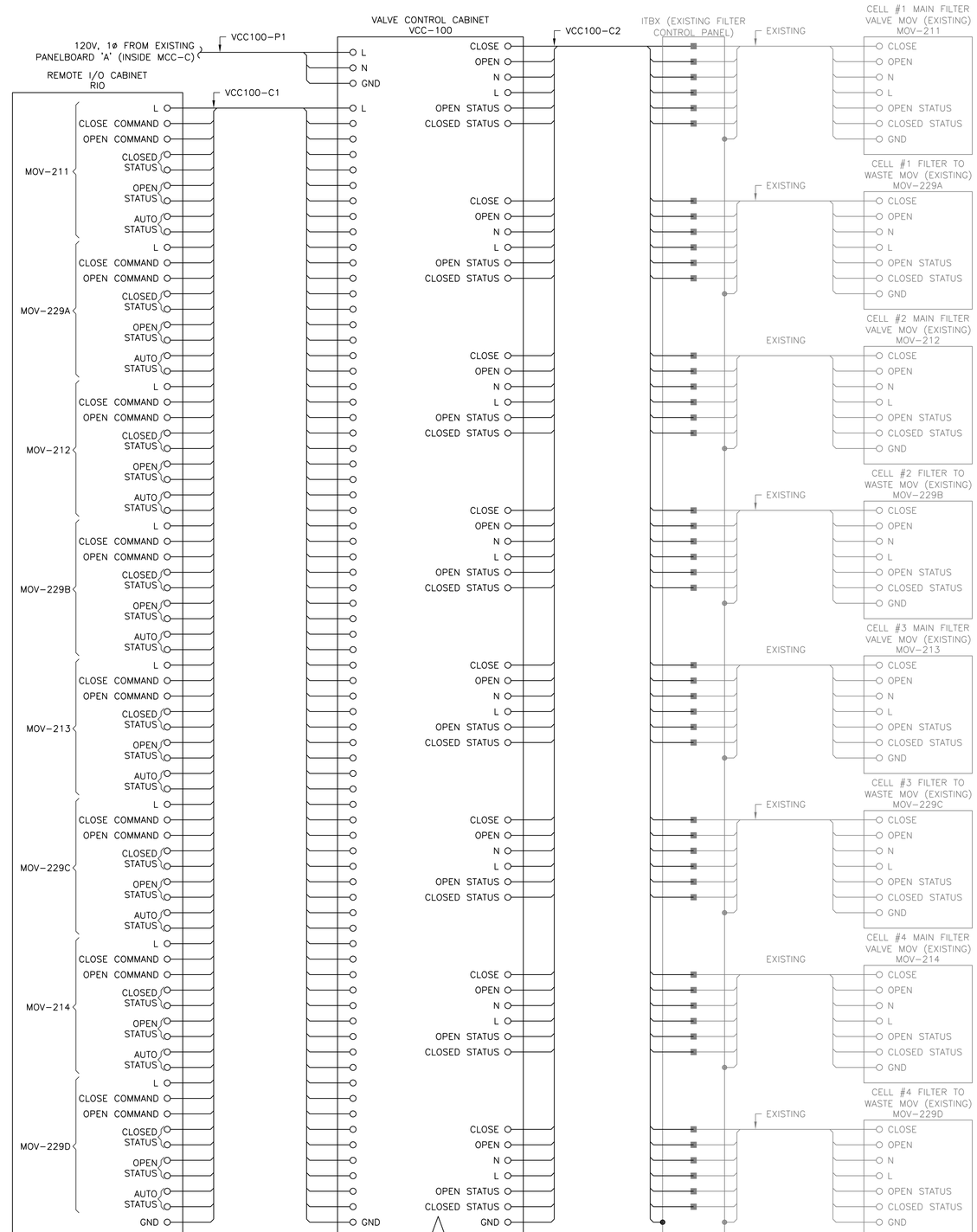

B ~ VALVE CONTROL CABINET (VCC-100) CONNECTION DIAGRAM
CONNECTION

E013

DELTA SYSTEMS
202 E. EARLL DRIVE, SUITE 110
PHOENIX, AZ 85012 602.266.4658

No.	REVISION	APPROVED	DATE

UNAUTHORIZED CHANGES AND USES: The engineer preparing these plans will not be responsible for, or liable for, unauthorized changes to or uses of these plans. All changes to these plans must be in writing and must be approved by the preparer of these plans.

DESIGNED BY: CW/DN	DRAWN BY: CW
SCALE:NTS	CHECKED BY: DN
BENCH MARK No.	ELEV.:

PREPARED UNDER THE DIRECT SUPERVISION OF:

BRIAN D. DOWNING — 17607 R.E.E. No.

09/15/2020 DATE — 6-30-21 REG. EXP.

REGISTERED PROFESSIONAL ENGINEER BRIAN DOWNING No. 17607 Exp. 06/30/21 ELECTRICAL STATE OF CALIFORNIA 09/15/20

The Holt Group, Inc.
ENGINEERING * SURVEYING * CONSTRUCTION MANAGEMENT * PLANNING
1601 N. IMPERIAL AVE. EL CENTRO, CA 92243 PHONE: (760) 337-3883 FAX: (760) 337-5997
201 E. HOBSONWAY BLYTHE, CA 92225 PHONE: (760) 922-4658 FAX: (760) 922-4660

PROJECT TITLE : CITY OF HOLTVILLE - WATER TREATMENT PLANT IMPROVEMENTS - CONTROL SYSTEM IMPROVEMENTS

PROJECT NUMBER : 116.455

SHEET CONTENT : VALVE CONTROL CABINET SCHEMATIC DIAGRAM - SHEET 2

SHEET NO. 30 OF 46 SHEETS

XREF: 1952_BDR

DWG FILE: X:\1900'S\1952.00 HOLTVILLE WTP CONTROLS SYSTEM UPGRADE RFP DEVELOPMENT\100 - E&I DESIGN_CAD FILES\1952.00.100_E013.DWG 3:34PM PLOTTED: Sep 15, 2020 johrens

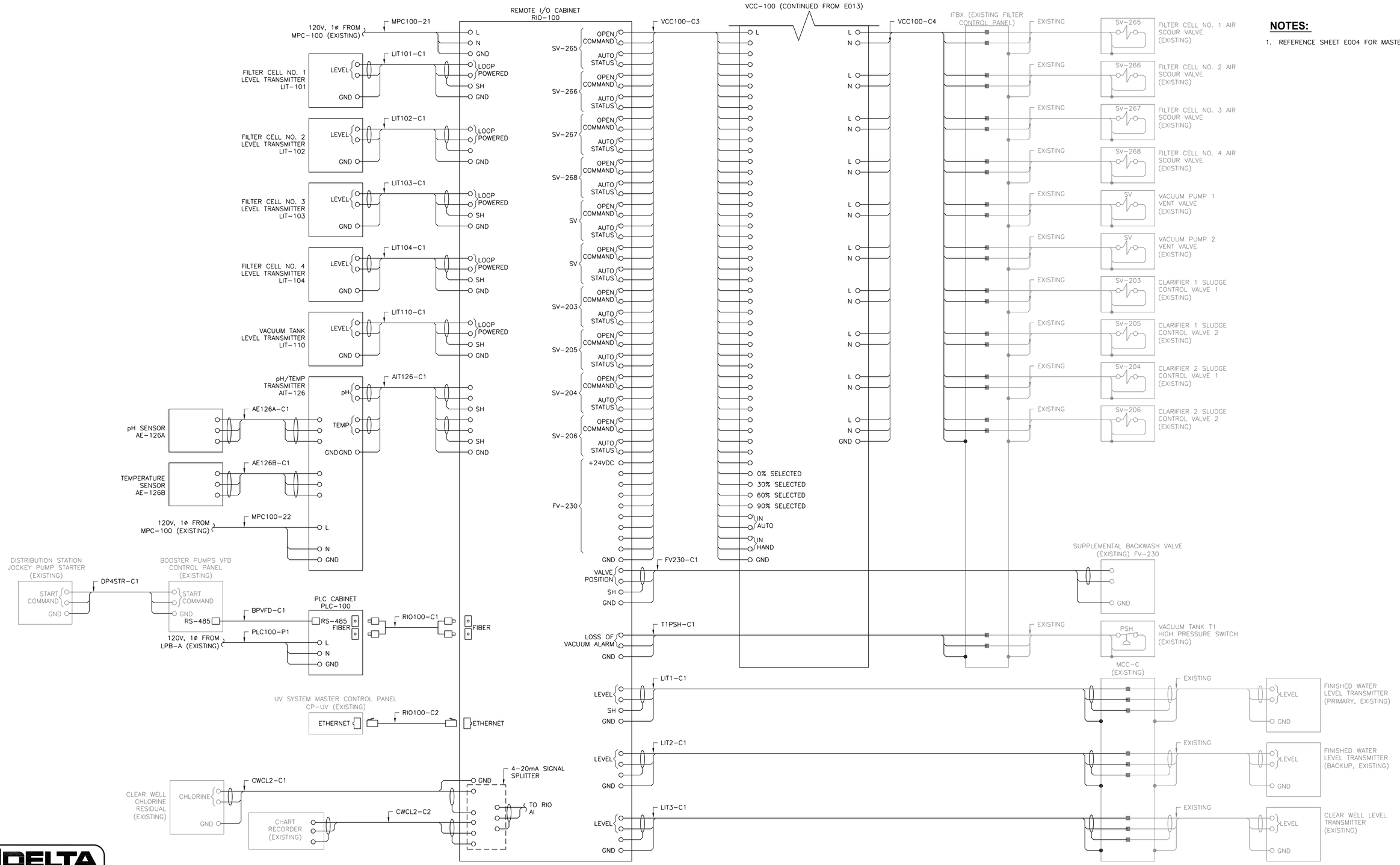

NOTES:

1. REFERENCE SHEET E004 FOR MASTER CIRCUIT SCHEDULE.

A ~ MISC. CONNECTION DIAGRAM
CONNECTION

E014

DELTA SYSTEMS
202 E. EARLL DRIVE, SUITE 110
PHOENIX, AZ 85012 602.266.4658

No.	REVISION	APPROVED	DATE

UNAUTHORIZED CHANGES AND USES: The engineer preparing these plans will not be responsible for, or liable for, unauthorized changes to or uses of these plans. All changes to these plans must be in writing and must be approved by the preparer of these plans.

DESIGNED BY: CW/DN	DRAWN BY: CW
SCALE:NTS	CHECKED BY: DN
BENCH MARK No.	ELEV.:

PREPARED UNDER THE DIRECT SUPERVISION OF:

BRIAN D. DOWNING — 17607 R.E.E. No.

09/15/2020 DATE — 6-30-21 REG. EXP.

REGISTERED PROFESSIONAL ENGINEER BRIAN DOWNING No. 17607 Exp. 06/30/21 ELECTRICAL STATE OF CALIFORNIA 09/15/20

The Holt Group, Inc.
ENGINEERING * SURVEYING * CONSTRUCTION MANAGEMENT * PLANNING
1601 N. IMPERIAL AVE. EL CENTRO, CA 92243 PHONE: (760) 337-3883 FAX: (760) 337-5997
201 E. HOBSONWAY BLYTHE, CA 92225 PHONE: (760) 922-4658 FAX: (760) 922-4660

PROJECT TITLE : CITY OF HOLTVILLE - WATER TREATMENT PLANT IMPROVEMENTS - CONTROL SYSTEM IMPROVEMENTS

PROJECT NUMBER : 116.455

SHEET CONTENT : MISCELLANEOUS CONNECTION DIAGRAM - SHEET 1

SHEET NO. 31 OF 46 SHEETS

XREF: 1952_BDR

DWG FILE: X:\1900'S\1952.00 HOLTVILLE WTP CONTROLS SYSTEM UPGRADE RFP DEVELOPMENT\100 - E&I DESIGN_CAD FILES\1952.00.100_E014.DWG 3:34PM PLOTTED: Sep 15, 2020 jahrens

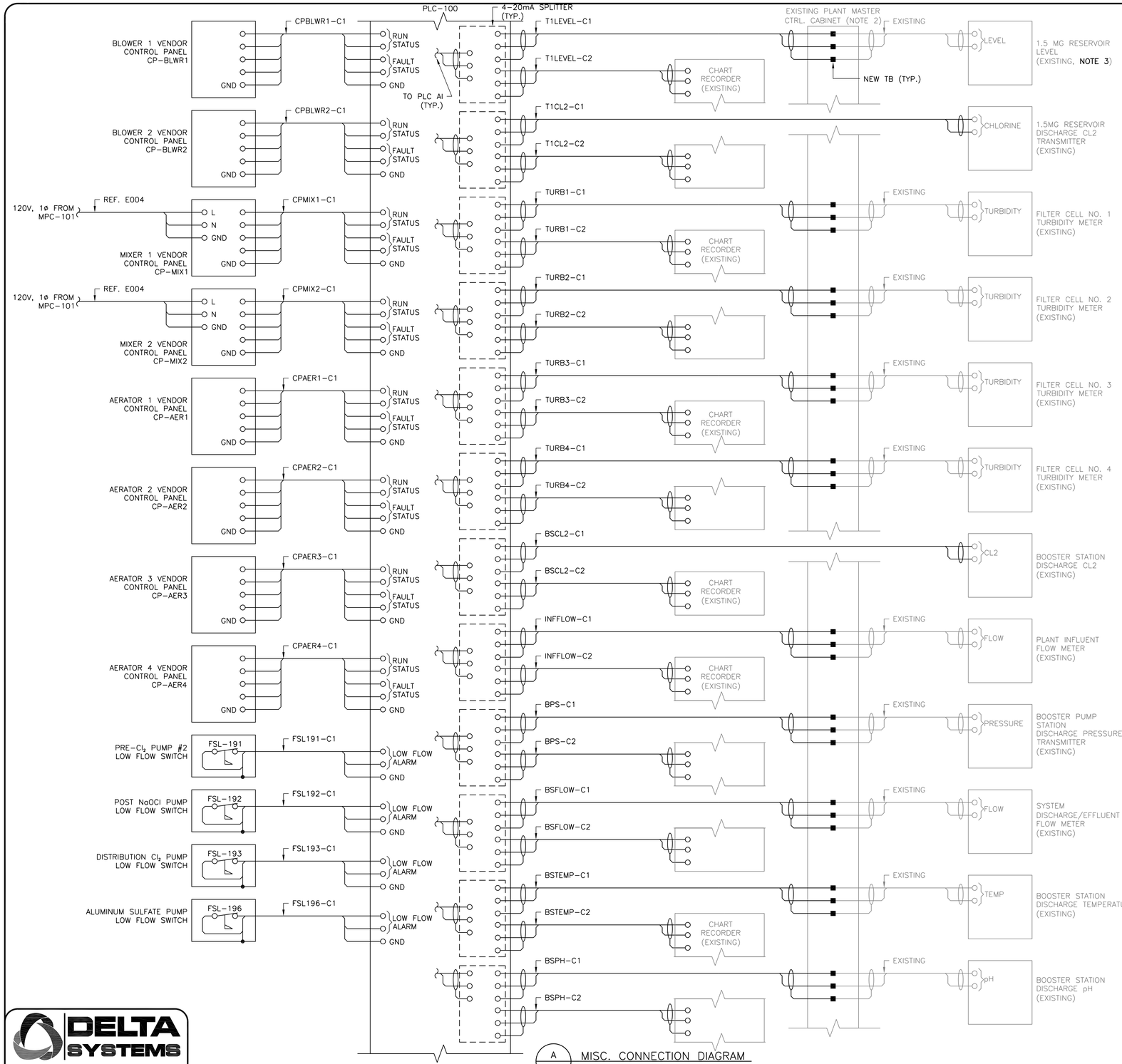

NOTES:

1. REFERENCE SHEET E004 FOR MASTER CIRCUIT SCHEDULE.
2. EXISTING ANALYZER/INSTRUMENT SIGNALS CURRENTLY CONNECTED TO CHART RECORDERS MOUNTED ON/IN EXISTING PLANT MASTER CONTROL PANEL AND IN LAB AREA SHALL BE DISCONNECTED AND RE-CONNECTED TO NEW TERMINAL BLOCKS INSIDE PLANT MASTER CONTROL PANEL TO FACILITATE CONNECTION TO 4-20mA SPLITTERS INSIDE NEW PLANT PLC CABINET AS SHOWN. A SIGNAL FROM EACH SPLITTER WILL THEN BE RE-ROUTED BACK TO RE-FEED ITS RESPECTIVE CHART RECORDER.
3. 1.5MG RESERVOIR LEVEL SIGNAL SHALL BE WIRED TO UNUSED INPUT/PEN ON CHART RECORDER CURRENTLY USED TO MONITOR 1.5MG RESERVOIR CL2.

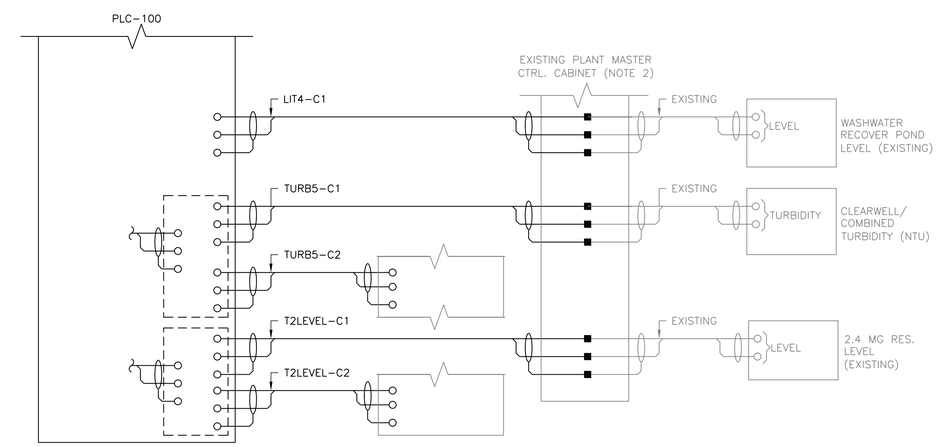

DELTA SYSTEMS
202 E. EARLL DRIVE, SUITE 110
PHOENIX, AZ 85012 602.266.4658

E015

No.	REVISION	APPROVED	DATE

UNAUTHORIZED CHANGES AND USES: The engineer preparing these plans will not be responsible for, or liable for, unauthorized changes to or uses of these plans. All changes to these plans must be in writing and must be approved by the preparer of these plans.

DESIGNED BY: CW/DN	DRAWN BY: CW
SCALE:NTS	CHECKED BY: DN
BENCH MARK No.	ELEV.:

PREPARED UNDER THE DIRECT SUPERVISION OF:

BRIAN D. DOWNING — 17607 R.E.E. No.

09/15/2020 DATE — 6-30-21 REG. EXP.

REGISTERED PROFESSIONAL ENGINEER BRIAN DOWNING No. 17607 Exp. 06/30/21 ELECTRICAL STATE OF CALIFORNIA 09/15/20

The Holt Group, Inc.
ENGINEERING * SURVEYING * CONSTRUCTION MANAGEMENT * PLANNING
1601 N. IMPERIAL AVE. EL CENTRO, CA 92243 PHONE: (760) 337-3883 FAX: (760) 337-5997
201 E. HOBSONWAY BLYTHE, CA 92225 PHONE: (760) 922-4658 FAX: (760) 922-4660

PROJECT TITLE : CITY OF HOLTVILLE - WATER TREATMENT PLANT IMPROVEMENTS - CONTROL SYSTEM IMPROVEMENTS

PROJECT NUMBER : 116.455

SHEET CONTENT : MISCELLANEOUS CONNECTION DIAGRAM - SHEET 2

SHEET NO. 32 OF 46 SHEETS

XREF: 1952_BDR

DWG FILE: X:\1900'S\1952.00 HOLTVILLE WTP CONTROLS SYSTEM UPGRADE RFP DEVELOPMENT\100 - E&I DESIGN_CAD FILES\1952.00.100_E015.DWG 3:34PM PLOTTED: Sep 15, 2020 johrens

NOTES:

1. REFERENCE SHEET E004 FOR MASTER CIRCUIT SCHEDULE.
2. INFORMATION SHOWN FOR EXISTING SOLID STATE STARTER WAS TAKEN FROM DRAWINGS BY KENNEDY/JENKS/CHILTON DATED NOVEMBER 8, 1990.
3. RETROFIT OR REPLACE EXISTING EXISTING HOA SWITCHES IN RAW WATER PUMP STARTERS SO AS TO PROVIDE NECESSARY AUX. CONTACT FOR REMOTE MONITORING OF 'IN AUTO' STATUS.
4. TYPICAL SCHEMATIC DIAGRAMS ARE INTENDED TO REFLECT THE GENERAL CONTROL STRATEGY. ACTUAL CIRCUITRY MAY VARY FOR SPECIFIC EQUIPMENT SUPPLIED. THE NUMBER AND TYPE OF DEVICES SHALL BE FURNISHED AS REQUIRED FOR PROPER OPERATION OF THE EQUIPMENT.
5. CONTROL POWER TRANSFORMERS (CPT) SHALL BE ADEQUATELY SIZED AND SHALL BE PROVIDED WITH PROPERLY SIZED FUSES FOR BOTH THE PRIMARY AND SECONDARY WINDINGS.
6. CONNECTIONS SHOWN TO PLC INPUTS AND OUTPUTS ARE SHOWN IN A SIMPLIFIED CONCEPTUAL MANNER.
7. RE-UITLIZE EXISTING BREAKER INSIDE PANEL 'LPB-A' CURRENTLY FEEDING CHEMICAL METERING PUMPS TO FEED POWER TO NEW METERING PUMP CONTROL PANEL 'MPCP-100'.
8. UTILIZE MACHINE TOOL RELAYS FOR 'JS190' AND 'JS195'.

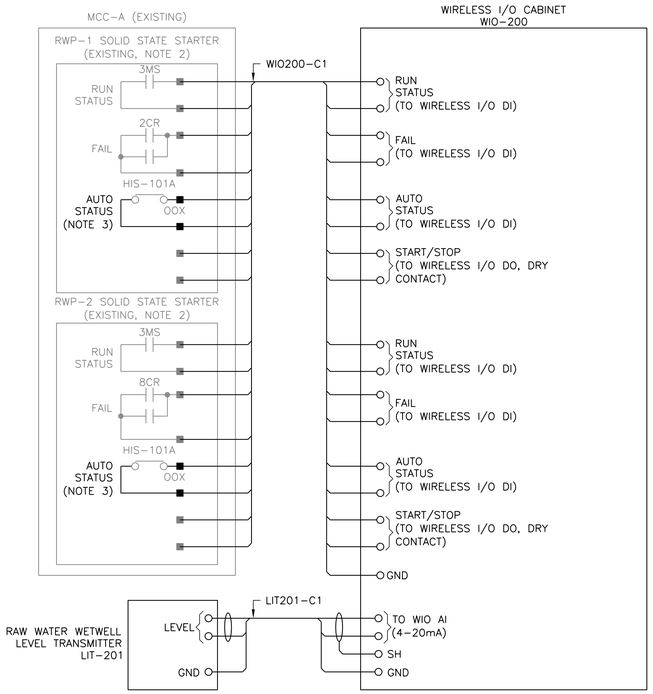

A MISC. CONNECTION DIAGRAM
CONNECTION

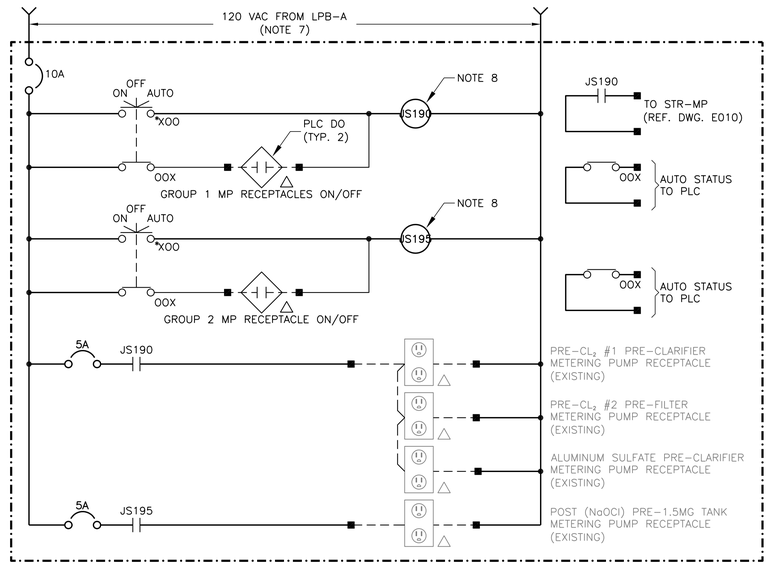

B METERING PUMP CONTROL PANEL (MPCP-100) SCHEMATIC
SCHEMATIC

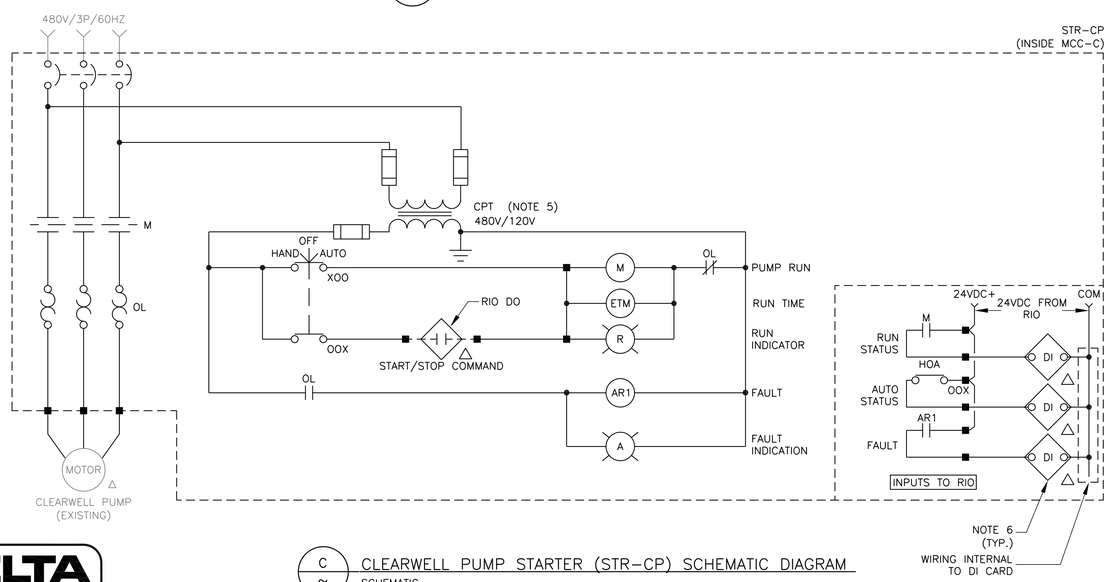

C CLEARWELL PUMP STARTER (STR-CP) SCHEMATIC DIAGRAM
SCHEMATIC
TYP. FOR STR-AB1

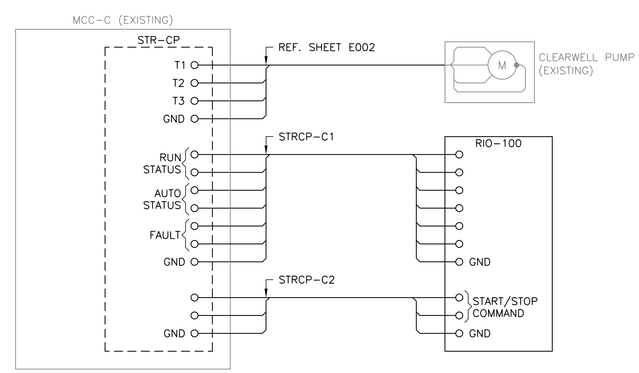

D CLEARWELL PUMP STARTER (STR-CP) CONNECTION DIAGRAM
CONNECTION
TYP. FOR STR-AB1

DELTA SYSTEMS
202 E. EARLL DRIVE, SUITE 110
PHOENIX, AZ 85012 602.266.4658

E016

No.	REVISION	APPROVED	DATE

UNAUTHORIZED CHANGES AND USES: The engineer preparing these plans will not be responsible for, or liable for, unauthorized changes to or uses of these plans. All changes to these plans must be in writing and must be approved by the preparer of these plans.

DESIGNED BY: CW/DN	DRAWN BY: CW
SCALE:NTS	CHECKED BY: DN
BENCH MARK No.	ELEV.:

PREPARED UNDER THE DIRECT SUPERVISION OF:

BRIAN D. DOWNING — 17607 R.E.E. No.

09/15/2020 DATE — 6-30-21 REG. EXP.

REGISTERED PROFESSIONAL ENGINEER BRIAN DOWNING No. 17607 Exp. 06/30/21 ELECTRICAL STATE OF CALIFORNIA 09/15/20

The Holt Group, Inc.
ENGINEERING * SURVEYING * CONSTRUCTION MANAGEMENT * PLANNING
1601 N. IMPERIAL AVE. EL CENTRO, CA 92243 PHONE: (760) 337-3883 FAX: (760) 337-5997
201 E. HOBSONWAY BLYTHE, CA 92225 PHONE: (760) 922-4658 FAX: (760) 922-4660

PROJECT TITLE : CITY OF HOLTVILLE - WATER TREATMENT PLANT IMPROVEMENTS - CONTROL SYSTEM IMPROVEMENTS

PROJECT NUMBER : 116.455

SHEET CONTENT : MISCELLANEOUS CONNECTION DIAGRAM - SHEET 3

SHEET NO. 33 OF 46 SHEETS

XREF: 1952_BDR

DWG FILE: X:\1900'S\1952.00 HOLTVILLE WTP CONTROLS SYSTEM UPGRADE RFP DEVELOPMENT\100 - E&I DESIGN_CAD FILES\1952.00.100_E016.DWG 3:35PM PLOTTED: Sep 15, 2020 jahrens

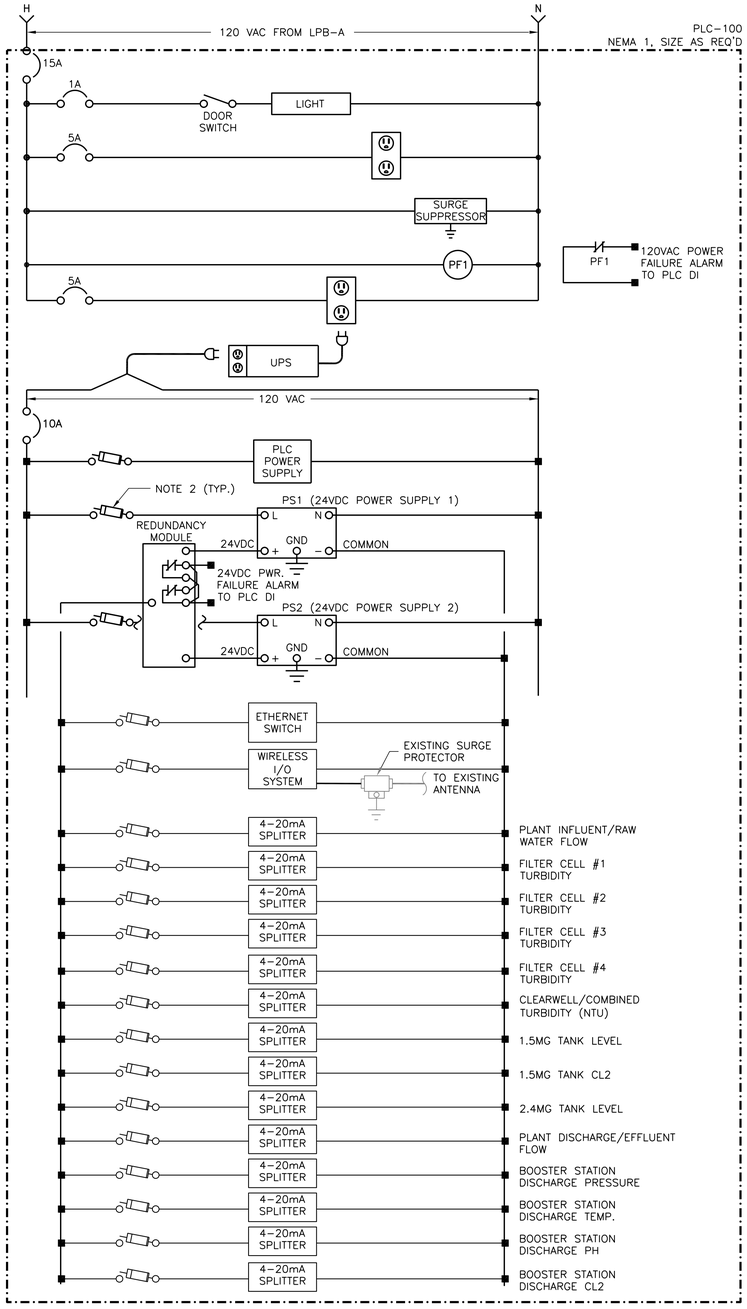

A ~ MAIN PLC CABINET POWER DISTRIBUTION SCHEMATIC (PLC-100)
SCHEMATIC

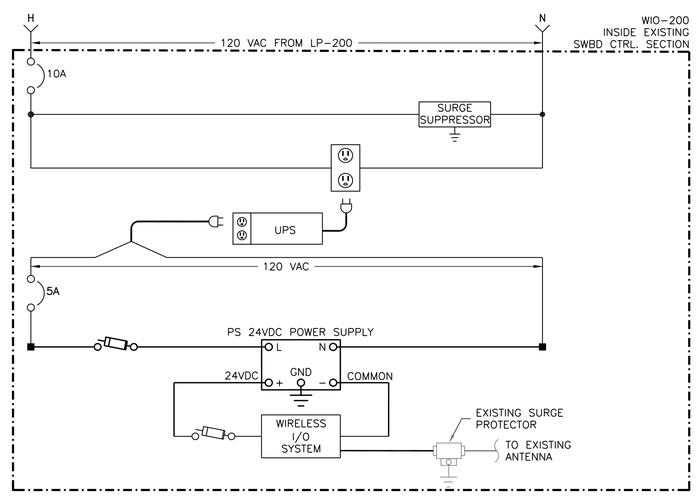

B ~ WIRELESS I/O CABINET POWER DISTRIBUTION SCHEMATIC (WIO-200)
SCHEMATIC

NOTES:

1. TYPICAL SCHEMATIC DIAGRAMS ARE INTENDED TO REFLECT THE GENERAL CONTROL STRATEGY. ACTUAL CIRCUITRY MAY VARY FOR SPECIFIC EQUIPMENT SUPPLIED. THE NUMBER AND TYPE OF DEVICES SHALL BE FURNISHED AS REQUIRED FOR PROPER OPERATION OF THE EQUIPMENT.
2. CONTROL FUSES AND CIRCUIT BREAKERS SHALL BE SIZED PER ASSOCIATED EQUIPMENT MANUFACTURERS' RECOMMENDATIONS.
3. REFER TO E021 (SYSTEM NETWORK COMMUNICATION DIAGRAM) FOR RTU AND WIO NETWORK COMMUNICATION REQUIREMENTS.

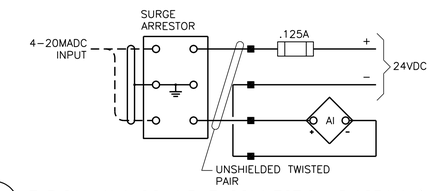

B ~ TYPICAL ANALOG INPUT CONNECTION DIAGRAM (LOOP POWERED)
SCHEMATIC

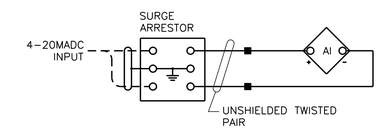

C ~ TYPICAL ANALOG INPUT CONNECTION DIAGRAM (ISOLATED)
SCHEMATIC

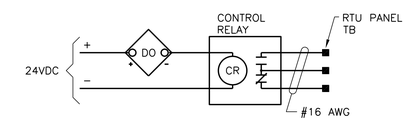

D ~ TYPICAL DIGITAL OUTPUT CONNECTION DIAGRAM
SCHEMATIC

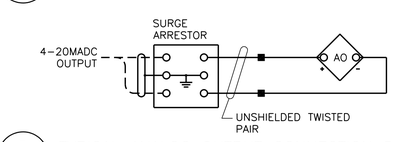

E ~ TYPICAL ANALOG OUTPUT CONNECTION DIAGRAM
SCHEMATIC

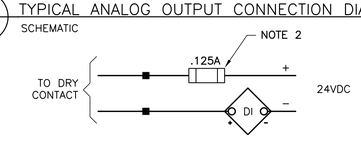

F ~ TYPICAL DIGITAL INPUT CONNECTION DIAGRAM
SCHEMATIC

E017

DELTA SYSTEMS
202 E. EARLL DRIVE, SUITE 110
PHOENIX, AZ 85012 602.266.4658

No.	REVISION	APPROVED	DATE

UNAUTHORIZED CHANGES AND USES: The engineer preparing these plans will not be responsible for, or liable for, unauthorized changes to or uses of these plans. All changes to these plans must be in writing and must be approved by the preparer of these plans.

DESIGNED BY: CW/DN	DRAWN BY: CW
SCALE: NTS	CHECKED BY: DN
BENCH MARK No.	ELEV.:

PREPARED UNDER THE DIRECT SUPERVISION OF:

BRIAN D. DOWNING — 17607 R.E.E. No.

09/15/2020 DATE — 6-30-21 REG. EXP.

REGISTERED PROFESSIONAL ENGINEER BRIAN DOWNING No. 17607 Exp. 06/30/21 ELECTRICAL STATE OF CALIFORNIA 09/15/20

The Holt Group, Inc.
ENGINEERING * SURVEYING * CONSTRUCTION MANAGEMENT * PLANNING
1601 N. IMPERIAL AVE. EL CENTRO, CA 92243 PHONE: (760) 337-3883 FAX: (760) 337-5997
201 E. HOBSONWAY BLYTHE, CA 92225 PHONE: (760) 922-4658 FAX: (760) 922-4660

PROJECT TITLE : CITY OF HOLTVILLE - WATER TREATMENT PLANT IMPROVEMENTS - CONTROL SYSTEM IMPROVEMENTS

PROJECT NUMBER : 116.455

SHEET CONTENT : PLC & WIO CABINET POWER DISTRIBUTION SCHEMATIC DIAGRAMS

SHEET NO. 34 OF 46 SHEETS

NOTES:

1. TYPICAL SCHEMATIC DIAGRAMS ARE INTENDED TO REFLECT THE GENERAL CONTROL STRATEGY. ACTUAL CIRCUITRY MAY VARY FOR SPECIFIC EQUIPMENT SUPPLIED. THE NUMBER AND TYPE OF DEVICES SHALL BE FURNISHED AS REQUIRED FOR PROPER OPERATION OF THE EQUIPMENT.
2. CONTROL FUSES AND CIRCUIT BREAKERS SHALL BE SIZED PER ASSOCIATED EQUIPMENT MANUFACTURERS' RECOMMENDATIONS.
3. REFER TO E021 (SYSTEM NETWORK COMMUNICATION DIAGRAM) FOR RIO NETWORK COMMUNICATION REQUIREMENTS.

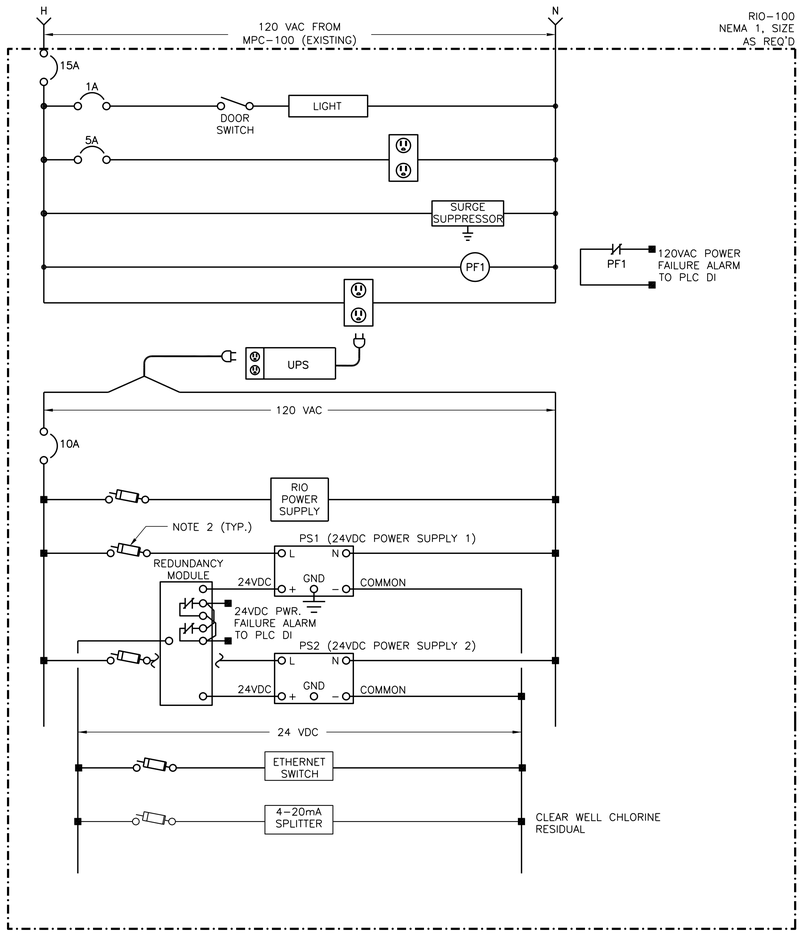

A ~ RIO POWER DISTRIBUTION SCHEMATIC (RIO-100)
SCHEMATIC

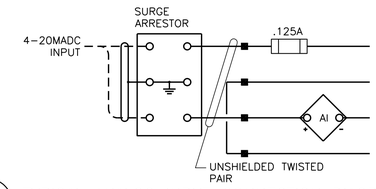

B ~ TYPICAL ANALOG INPUT CONNECTION DIAGRAM (LOOP POWERED)
SCHEMATIC

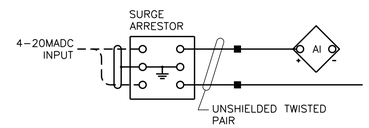

C ~ TYPICAL ANALOG INPUT CONNECTION DIAGRAM (ISOLATED)
SCHEMATIC

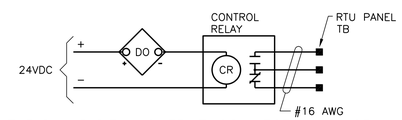

D ~ TYPICAL DIGITAL OUTPUT CONNECTION DIAGRAM
SCHEMATIC

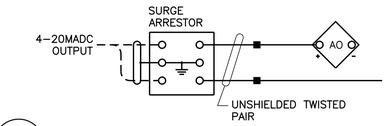

E ~ TYPICAL ANALOG OUTPUT CONNECTION DIAGRAM
SCHEMATIC

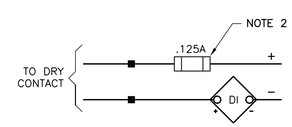

F ~ TYPICAL DIGITAL INPUT CONNECTION DIAGRAM
SCHEMATIC

DELTA SYSTEMS
202 E. EARLL DRIVE, SUITE 110
PHOENIX, AZ 85012 602.266.4658

E018

No.	REVISION	APPROVED	DATE

UNAUTHORIZED CHANGES AND USES: The engineer preparing these plans will not be responsible for, or liable for, unauthorized changes to or uses of these plans. All changes to these plans must be in writing and must be approved by the preparer of these plans.

DESIGNED BY: CW/DN	DRAWN BY: CW
SCALE:NTS	CHECKED BY: DN
BENCH MARK No.	ELEV.:

PREPARED UNDER THE DIRECT SUPERVISION OF:

BRIAN D. DOWNING — 17607 R.E.E. No.

09/15/2020 DATE — 6-30-21 REG. EXP.

REGISTERED PROFESSIONAL ENGINEER BRIAN DOWNING No. 17607 Exp. 06/30/21 ELECTRICAL STATE OF CALIFORNIA 09/15/20

The Holt Group, Inc.
ENGINEERING * SURVEYING * CONSTRUCTION MANAGEMENT * PLANNING
1601 N. IMPERIAL AVE. EL CENTRO, CA 92243 PHONE: (760) 337-3883 FAX: (760) 337-5997
201 E. HOBSONWAY BLYTHE, CA 92225 PHONE: (760) 922-4658 FAX: (760) 922-4660

PROJECT TITLE : CITY OF HOLTVILLE - WATER TREATMENT PLANT IMPROVEMENTS - CONTROL SYSTEM IMPROVEMENTS

PROJECT NUMBER : 116.455

SHEET CONTENT : RIO CABINET SCHEMATIC DIAGRAM

SHEET NO. 35 OF 46 SHEETS

XREF: 1952_BDR

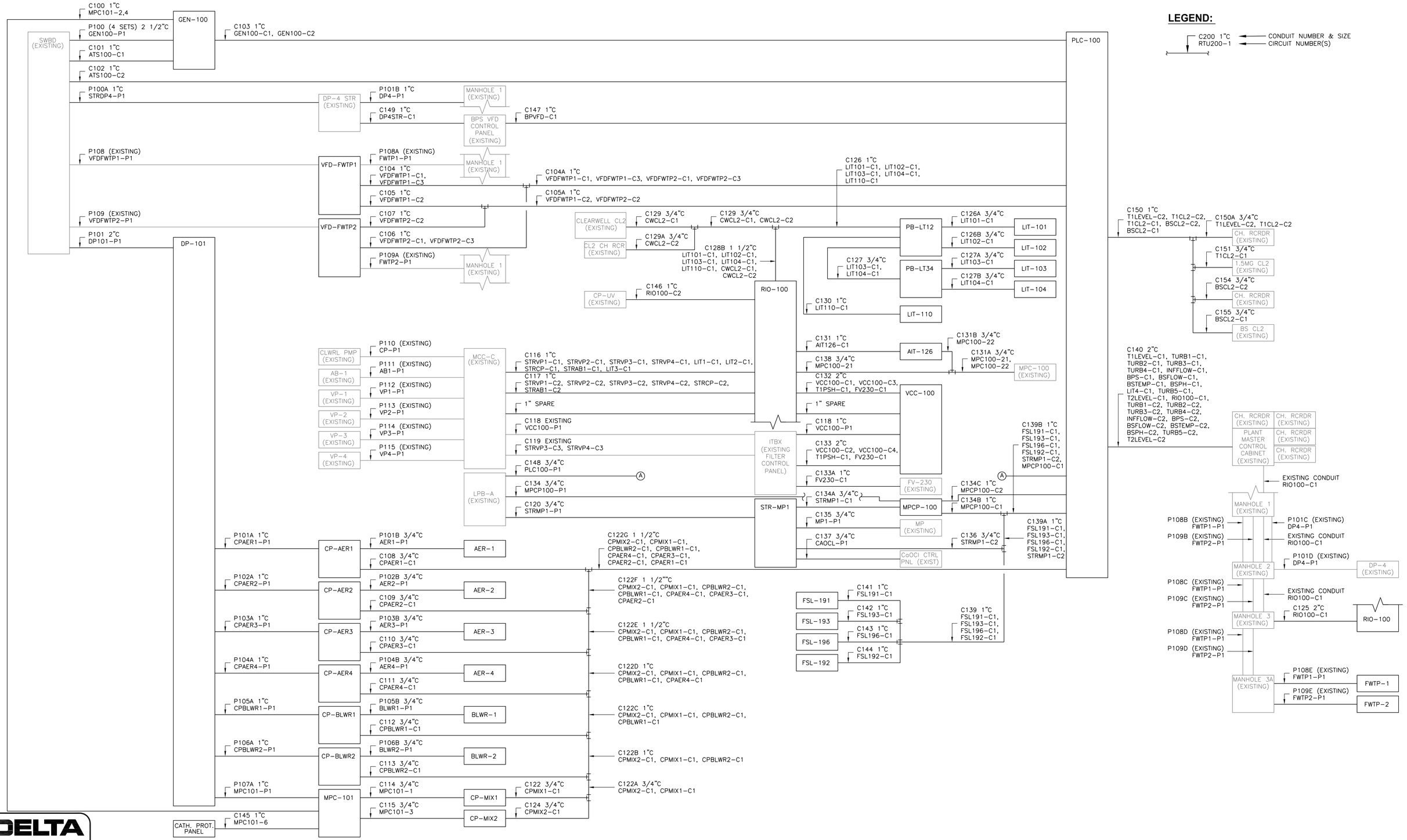

DELTA SYSTEMS
202 E. EARLL DRIVE, SUITE 110
PHOENIX, AZ 85012 602.266.4658

A ~ CONDUIT BLOCK DIAGRAM

E019

No.	REVISION	APPROVED	DATE

UNAUTHORIZED CHANGES AND USES: The engineer preparing these plans will not be responsible for, or liable for, unauthorized changes to or uses of these plans. All changes to these plans must be in writing and must be approved by the preparer of these plans.

DESIGNED BY: CW/DN	DRAWN BY: CW
SCALE:NTS	CHECKED BY: DN
BENCH MARK No.	ELEV.:

PREPARED UNDER THE DIRECT SUPERVISION OF:

BRIAN D. DOWNING — 17607 R.E.E. No.

09/15/2020 DATE — 6-30-21 REG. EXP.

REGISTERED PROFESSIONAL ENGINEER BRIAN DOWNING No. 17607 Exp. 06/30/21 ELECTRICAL STATE OF CALIFORNIA 09/15/20

The Holt Group, Inc.
ENGINEERING * SURVEYING * CONSTRUCTION MANAGEMENT * PLANNING
1601 N. IMPERIAL AVE. EL CENTRO, CA 92243 PHONE: (760) 337-3883 FAX: (760) 337-5997
201 E. HOBSONWAY BLYTHE, CA 92225 PHONE: (760) 922-4658 FAX: (760) 922-4660

PROJECT TITLE : CITY OF HOLTVILLE - WATER TREATMENT PLANT IMPROVEMENTS - CONTROL SYSTEM IMPROVEMENTS

PROJECT NUMBER : 116.455

SHEET CONTENT : CONDUIT BLOCK DIAGRAM - SHEET 1

SHEET NO. 36 OF 46 SHEETS

XREF: 1952_BDR

DWG FILE: X:\1900'S\1952.00 HOLTVILLE WTP CONTROLS SYSTEM UPGRADE RFP DEVELOPMENT\100 - E&I DESIGN_CAD FILES\1952.00.100_E019.DWG 3:35PM PLOTTED: Sep 15, 2020 jahrens

LEGEND:

C200 1"C ← CONDUIT NUMBER & SIZE
RTU200-1 ← CIRCUIT NUMBER(S)

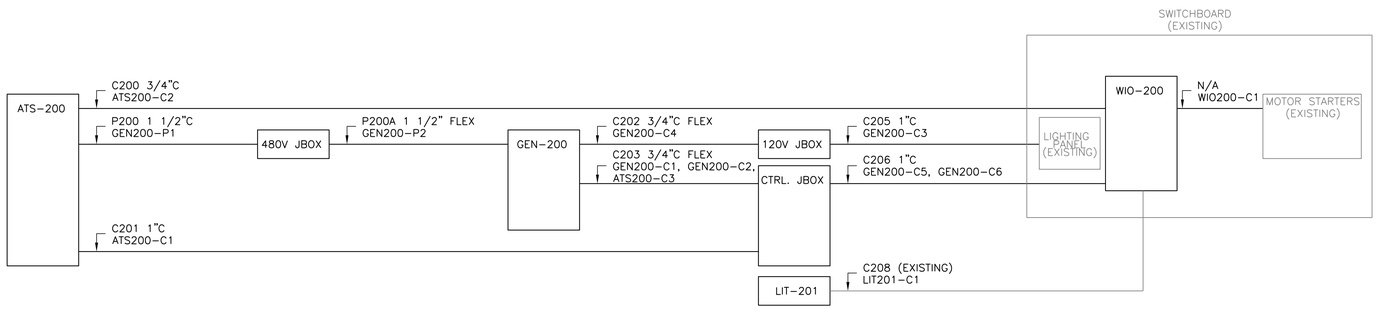

A ~ RAW WATER POND/PUMP STATION CONDUIT BLOCK DIAGRAM

DELTA SYSTEMS
202 E. EARLL DRIVE, SUITE 110
PHOENIX, AZ 85012 602.266.4658

E020

No.	REVISION	APPROVED	DATE

UNAUTHORIZED CHANGES AND USES: The engineer preparing these plans will not be responsible for, or liable for, unauthorized changes to or uses of these plans. All changes to these plans must be in writing and must be approved by the preparer of these plans.

DESIGNED BY: CW/DN	DRAWN BY: CW
SCALE:NTS	CHECKED BY: DN
BENCH MARK No.	ELEV.:

PREPARED UNDER THE DIRECT SUPERVISION OF:

BRIAN D. DOWNING — 17607 R.E.E. No.

09/15/2020 DATE — 6-30-21 REG. EXP.

REGISTERED PROFESSIONAL ENGINEER BRIAN DOWNING No. 17607 Exp. 06/30/21 ELECTRICAL STATE OF CALIFORNIA 09/15/20

The Holt Group, Inc.
ENGINEERING * SURVEYING * CONSTRUCTION MANAGEMENT * PLANNING
1601 N. IMPERIAL AVE. EL CENTRO, CA 92243 PHONE: (760) 337-3883 FAX: (760) 337-5997
201 E. HOBSONWAY BLYTHE, CA 92225 PHONE: (760) 922-4658 FAX: (760) 922-4660

PROJECT TITLE : CITY OF HOLTVILLE - WATER TREATMENT PLANT IMPROVEMENTS - CONTROL SYSTEM IMPROVEMENTS

PROJECT NUMBER : 116.455

SHEET CONTENT : CONDUIT BLOCK DIAGRAM - SHEET 2

SHEET NO. 37 OF 46 SHEETS

XREF: 1952_BDR

DWG FILE: X:\1900'S\1952.00 HOLTVILLE WTP CONTROLS SYSTEM UPGRADE RFP DEVELOPMENT\100 - E&I DESIGN_CAD FILES\1952.00.100_E020.DWG 3:35PM PLOTTED: Sep 15, 2020 jahrens

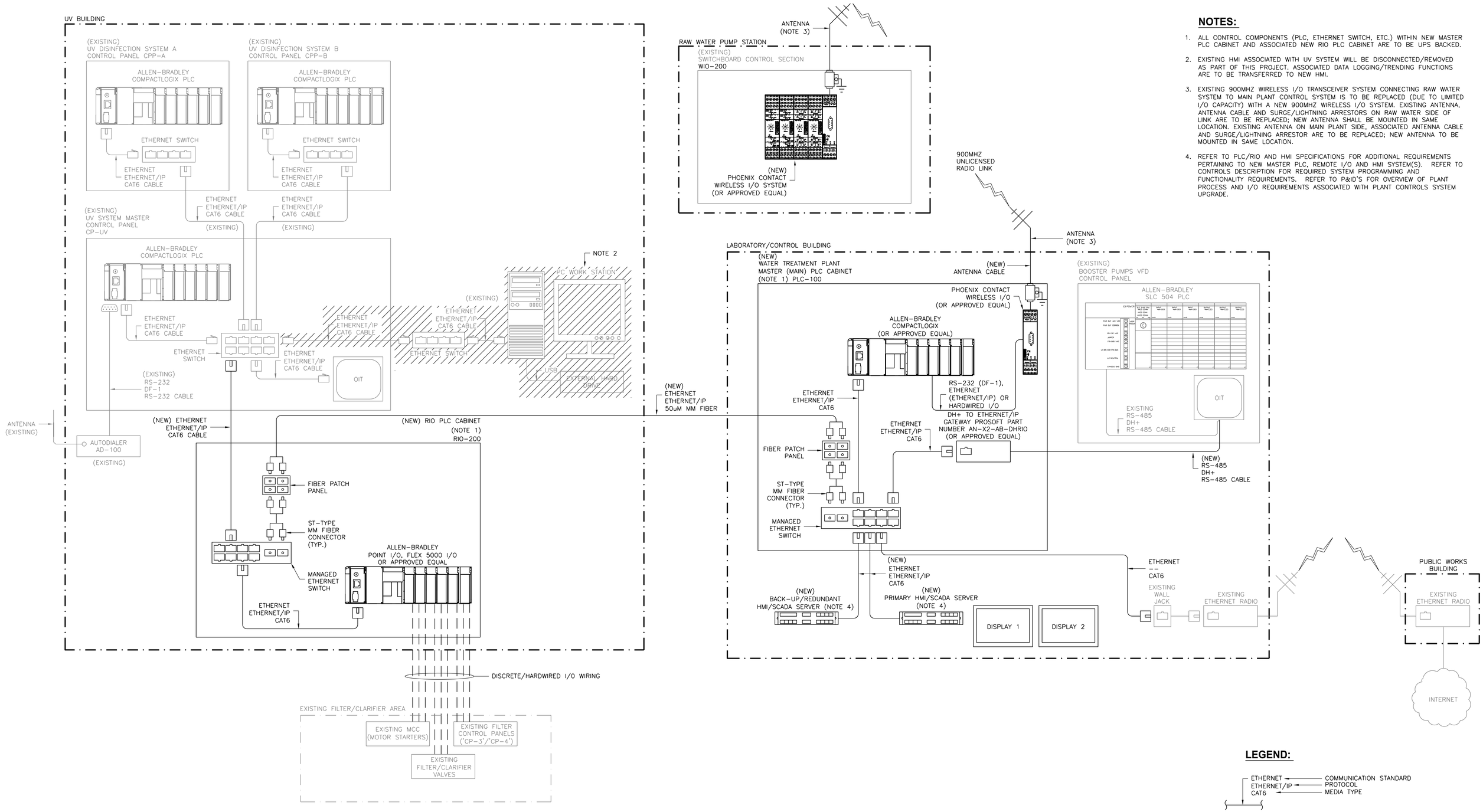

NOTES:

1. ALL CONTROL COMPONENTS (PLC, ETHERNET SWITCH, ETC.) WITHIN NEW MASTER PLC CABINET AND ASSOCIATED NEW RIO PLC CABINET ARE TO BE UPS BACKED.
2. EXISTING HMI ASSOCIATED WITH UV SYSTEM WILL BE DISCONNECTED/REMOVED AS PART OF THIS PROJECT. ASSOCIATED DATA LOGGING/TRENDING FUNCTIONS ARE TO BE TRANSFERRED TO NEW HMI.
3. EXISTING 900MHZ WIRELESS I/O TRANSCEIVER SYSTEM CONNECTING RAW WATER SYSTEM TO MAIN PLANT CONTROL SYSTEM IS TO BE REPLACED (DUE TO LIMITED I/O CAPACITY) WITH A NEW 900MHZ WIRELESS I/O SYSTEM. EXISTING ANTENNA, ANTENNA CABLE AND SURGE/LIGHTNING ARRESTORS ON RAW WATER SIDE OF LINK ARE TO BE REPLACED; NEW ANTENNA SHALL BE MOUNTED IN SAME LOCATION. EXISTING ANTENNA ON MAIN PLANT SIDE, ASSOCIATED ANTENNA CABLE AND SURGE/LIGHTNING ARRESTOR ARE TO BE REPLACED; NEW ANTENNA TO BE MOUNTED IN SAME LOCATION.
4. REFER TO PLC/RIO AND HMI SPECIFICATIONS FOR ADDITIONAL REQUIREMENTS PERTAINING TO NEW MASTER PLC, REMOTE I/O AND HMI SYSTEM(S). REFER TO CONTROLS DESCRIPTION FOR REQUIRED SYSTEM PROGRAMMING AND FUNCTIONALITY REQUIREMENTS. REFER TO P&ID'S FOR OVERVIEW OF PLANT PROCESS AND I/O REQUIREMENTS ASSOCIATED WITH PLANT CONTROLS SYSTEM UPGRADE.

LEGEND:

ETHERNET — COMMUNICATION STANDARD
ETHERNET/IP — PROTOCOL
CAT6 — MEDIA TYPE

A ~ WATER TREATMENT PLANT COMMUNICATIONS SYSTEM NETWORK DIAGRAM

DELTA SYSTEMS
202 E. EARLL DRIVE, SUITE 110
PHOENIX, AZ 85012 602.266.4658

E021

No.	REVISION	APPROVED	DATE

UNAUTHORIZED CHANGES AND USES: The engineer preparing these plans will not be responsible for, or liable for, unauthorized changes to or uses of these plans. All changes to these plans must be in writing and must be approved by the preparer of these plans.

DESIGNED BY: CW/DN	DRAWN BY: CW
SCALE:NTS	CHECKED BY: DN
BENCH MARK No.	ELEV.:

PREPARED UNDER THE DIRECT SUPERVISION OF:

BRIAN D. DOWNING — 17607 R.E.E. No.

09/15/2020 DATE — 6-30-21 REG. EXP.

REGISTERED PROFESSIONAL ENGINEER BRIAN DOWNING No. 17607 Exp. 06/30/21 ELECTRICAL STATE OF CALIFORNIA 09/15/20

The Holt Group, Inc.
ENGINEERING * SURVEYING * CONSTRUCTION MANAGEMENT * PLANNING
1601 N. IMPERIAL AVE. EL CENTRO, CA 92243 PHONE: (760) 337-3883 FAX: (760) 337-5997
201 E. HOBSONWAY BLYTHE, CA 92225 PHONE: (760) 922-4658 FAX: (760) 922-4660

PROJECT TITLE : CITY OF HOLTVILLE - WATER TREATMENT PLANT IMPROVEMENTS - CONTROL SYSTEM IMPROVEMENTS

PROJECT NUMBER : 116.455

SHEET CONTENT : SYSTEM NETWORK COMMUNICATIONS DIAGRAM

SHEET NO. 38 OF 46 SHEETS

XREF: 1952_BDR

DWG FILE: X:\1900'S\1952.00 HOLTVILLE WTP CONTROLS SYSTEM UPGRADE RFP DEVELOPMENT\100 - E&I DESIGN_CAD FILES\1952.00.100_E021.DWG 3:35PM PLOTTED: Sep 15, 2020 jahrens

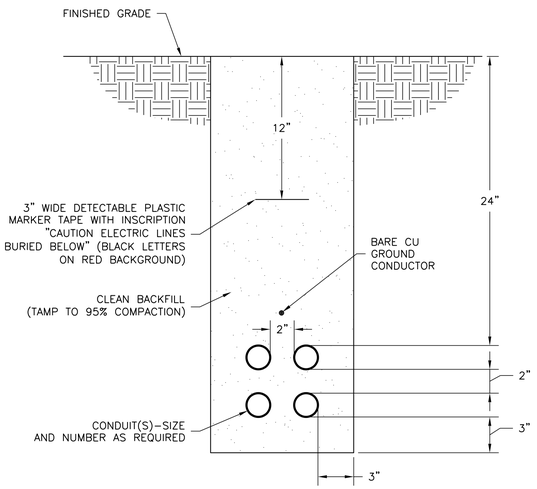

NOTES:

1. GROUND CONDUCTOR SHALL RUN CONTINUOUSLY THROUGH MANHOLES AND SHALL CONTINUE FROM DUCTBANK INTO SWITCHGEAR OR BUILDING GROUNDING SYSTEM AND SHALL BE BONDED TO EACH RIGID METAL CONDUIT. SIZE TO BE #4/0 UNLESS OTHERWISE INDICATED ON PLANS.
2. ALL DIMENSIONS ARE MINIMUM.

101 TYP — DUCTBANK – DIRECT BURIED
NOT TO SCALE

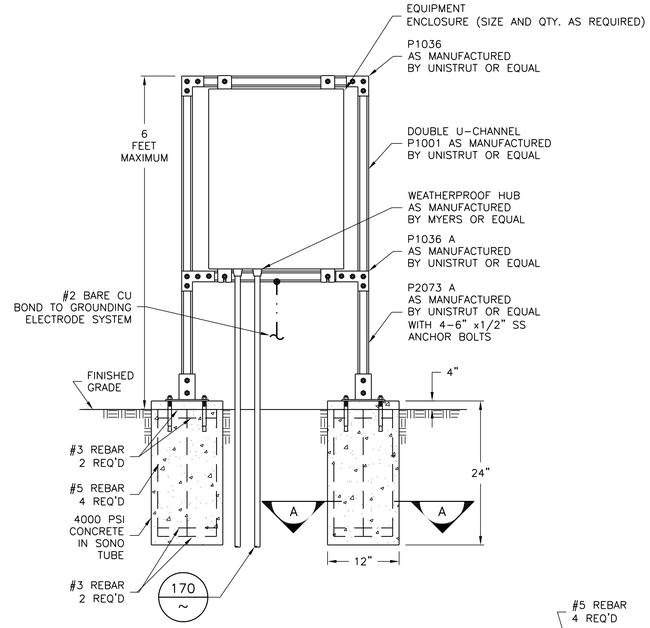

209 TYP — EQUIPMENT RACK DETAIL – NON-CLASSIFIED AREAS
NOT TO SCALE

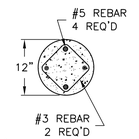

A — SECTION
NOT TO SCALE

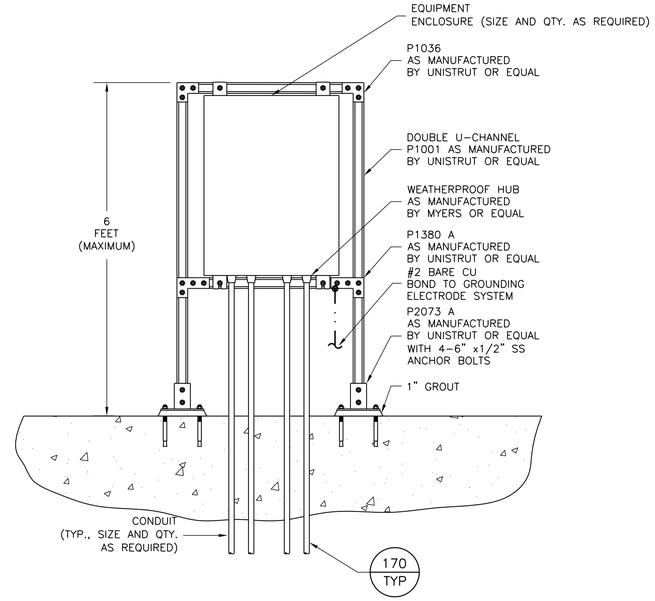

207 TYP — EQUIPMENT RACK DETAIL – NON-CLASSIFIED AREAS
NOT TO SCALE

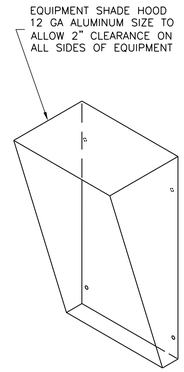

209A TYP — EQUIPMENT SHADE HOOD DETAIL
NOT TO SCALE

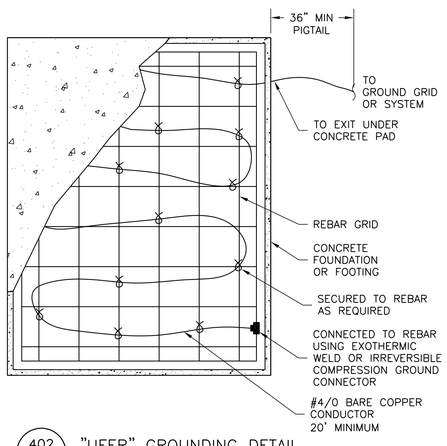

402 TYP — "UFER" GROUNDING DETAIL
NOT TO SCALE

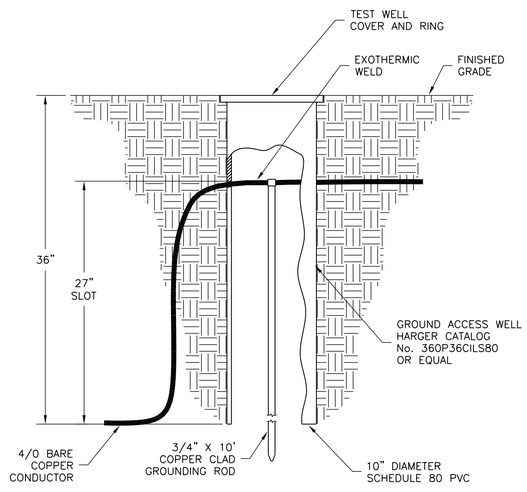

406 TYP — GROUND ROD WITH TEST ACCESS WELL
NOT TO SCALE

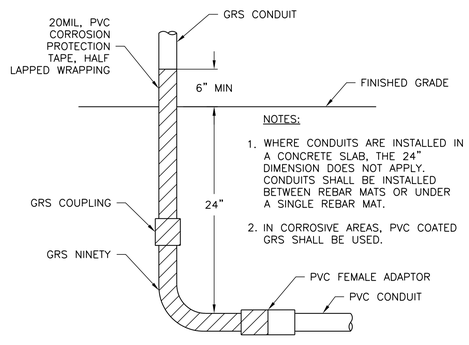

NOTES:

1. WHERE CONDUITS ARE INSTALLED IN A CONCRETE SLAB, THE 24" DIMENSION DOES NOT APPLY. CONDUITS SHALL BE INSTALLED BETWEEN REBAR MATS OR UNDER A SINGLE REBAR MAT.
2. IN CORROSIVE AREAS, PVC COATED GRS SHALL BE USED.

170 TYP — GRS STUB UP DETAIL
NOT TO SCALE

DELTA SYSTEMS
202 E. EARLL DRIVE, SUITE 110
PHOENIX, AZ 85012 602.266.4658

E022

No.	REVISION	APPROVED	DATE

UNAUTHORIZED CHANGES AND USES: The engineer preparing these plans will not be responsible for, or liable for, unauthorized changes to or uses of these plans. All changes to these plans must be in writing and must be approved by the preparer of these plans.

DESIGNED BY: CW/DN	DRAWN BY: CW
SCALE:NTS	CHECKED BY: DN
BENCH MARK No.	ELEV.:

PREPARED UNDER THE DIRECT SUPERVISION OF:

BRIAN D. DOWNING — 17607 R.E.E. No.

09/15/2020 DATE — 6-30-21 REG. EXP.

REGISTERED PROFESSIONAL ENGINEER BRIAN DOWNING No. 17607 Exp. 06/30/21 ELECTRICAL STATE OF CALIFORNIA 09/15/20

The Holt Group, Inc.
ENGINEERING * SURVEYING * CONSTRUCTION MANAGEMENT * PLANNING
1601 N. IMPERIAL AVE. EL CENTRO, CA 92243 PHONE: (760) 337-3883 FAX: (760) 337-5997
201 E. HOBSONWAY BLYTHE, CA 92225 PHONE: (760) 922-4658 FAX: (760) 922-4660

PROJECT TITLE : CITY OF HOLTVILLE - WATER TREATMENT PLANT IMPROVEMENTS - CONTROL SYSTEM IMPROVEMENTS

PROJECT NUMBER : 116.455

SHEET CONTENT : ELECTRICAL DETAILS

SHEET NO. 39 OF 46 SHEETS

XREF: 1952_BDR

DWG FILE: X:\1900'S\1952.00 HOLTVILLE WTP CONTROLS SYSTEM UPGRADE RFP DEVELOPMENT\100 – E&I DESIGN_CAD FILES\1952.00.100_E022.DWG 3:35PM PLOTTED: Sep 15, 2020 jahrens

ISA INSTRUMENT IDENTIFICATION TABLE

FIRST LETTERS			SUCCEEDING LETTERS		
MEASURED OR INITIATING VARIABLE		MODIFIER	READOUT OR PASSIVE FUNCTION	OUTPUT FUNCTION	MODIFIER
A	ANALYZER		ALARM		AUTO
B	BURNER, COMBUSTION				
C	CONDUCTIVITY			CONTROL	CLOSED
D	DENSITY	DIFFERENTIAL			
E	VOLTAGE		ELEMENT		
F	FLOW	RATIO			
G	GAUGE		GLASS, VIEWING DEVICE		
H	HAND				HIGH
I	CURRENT		INDICATE		
J	POWER	SCAN			
K	TIME, TIME SCHED.	TIME RATE OF CHANGE		CONTROL STATION	
L	LEVEL		LIGHT		LOW
M	MOTION				MIDDLE
N	INTRUSION				NORMAL
O	TORQUE		ORIFICE, RESTRICTION		OPEN
P	PRESSURE		POINT CONNECTION		STOP
Q	QUANTITY	INTEGRATE, TOTALIZE			
R	RADIATION		RECORD, OR PRINT		RUN OR REMOTE
S	SPEED, FREQUENCY	SAFETY		SWITCH	START
T	TEMPERATURE			TRANSMIT	
U	MULTIVARIABLE		MULTIFUNCTION	MULTIFUNCTION	MULTIFUNCTION
V	VIBRATION			VALVE, LOUVER	
W	WEIGHT		WELL		
X	MOTOR	X-AXIS	UNCLASSIFIED	UNCLASSIFIED	UNCLASSIFIED
Y	EVENT, STATE, OR PRESENCE	Y-AXIS		RELAY, COMPUTE, CONVERT	
Z	POSITION	Z-AXIS		DRIVER, ACTUATOR, FINAL CONTROL ELEMENT	

P&ID ABBREVIATIONS

A	AMPERE
AFD	ADJUSTABLE FREQUENCY DRIVE
AI	ANALOG INPUT
AIC	AMPS INTERRUPTING CAPACITY
ARV	AIR RELIEF VALVE
AO	ANALOG OUTPUT
AS	AIR SUPPLY
ATS	AUTOMATIC TRANSFER SWITCH
AUTO	AUTOMATIC
CB	CIRCUIT BREAKER
CL2	CHLORINE
CON	CONTACTOR
CU	COPPER
CV	CONTROL VALVE
DCS	DISTRIBUTED CONTROL SYSTEM
DI	DISCRETE INPUT
DO	DISSOLVED OXYGEN, DISCRETE OUTPUT
DP	DIFFERENTIAL PRESSURE
DWG	DRAWING
EGO	EMERGENCY GAS OFF
ETM	ELAPSED TIME METER
ETMf	ELAPSED TIME METER (FAST SPEED)
ETMs	ELAPSED TIME METER (SLOW SPEED)
EOL	ELECTRONIC OVERLOAD
EXIST	EXISTING
FA	FOUL AIR
FC	FAIL CLOSED
FE	FINAL EFFLUENT
FR	FORWARD-REVERSE
FS	FLOAT SWITCH
FVNR	FULL VOLTAGE NON-REVERSING
FW	FINISHED WATER
GND	GROUND
GAL	GALLONS
GPD	GALLONS PER DAY
GPH	GALLONS PER HOUR
GPM	GALLONS PER MINUTE
H, HI	HIGH
H2S	HYDROGEN SULFIDE
HMI	HUMAN MACHINE INTERFACE
HOA	HAND-OFF-AUTO
I	CURRENT
IO	INPUT/OUTPUT
IOE	INTERNAL-OFF-EXTERNAL
JB	JUNCTION BOX
L, LO	LOW
LAN	LOCAL AREA NETWORK
LC	LOOP CONTROLLER
LCP	LOCAL CONTROL PANEL
LOS	LOCK-OFF-STOP
LR	LOCAL/REMOTE
LS	LEVEL (i.e.. FLOAT) SWITCH
M	MOTOR
MA	MANUAL/AUTO
mA	MILLIAMP
MC	MANUFACTURE CABLE
MCC	MOTOR CONTROL CENTER
MCP	MOTOR CIRCUIT PROTECTOR
MFR(S)	MANUFACTURER(S)
MGD	MILLION GALLONS PER DAY
MGL	MILLIGRAMS PER LITER
MH	MANHOLE
MLR	MIXED LIQUOR RETURN
MO	MOISTURE
MOD	MODULATED
MTU	MASTER TELEMETRY UNIT
NPW	NON-POTABLE WATER
NS	NITROGEN SUPPLY
NTU	TURBIDITY
O/C	OPEN / CLOSE
OCA	OPEN-CLOSE-AUTO
OCR	OPEN-CLOSE-REMOTE
OIT	OPERATOR INTERFACE TERMINAL
OL	OVERLOAD
OO	ON/OFF (MAINTAINED)
OOA	ON-OFF-AUTO
OOR	ON-OFF-REMOTE
OSC	OPEN-STOP-CLOSE
PAH	PRESSURE ALARM HIGH
PER	PERMISSIVE
PLC	PROGRAMMABLE LOGIC CONTROLLER
PNL	PANEL
PO	PULSE OUTPUT
POS	POSITION
POT	POTENTIOMETER
PPG	POUNDS PER GALLON
PPH	POUNDS PER HOUR
PPM	PARTS PER MILLION
PR	PAIR
PRES	PRESSURE
PS	PRESSURE SWITCH
PSI	POUNDS PER SQUARE INCH
PV	PROCESS VARIABLE
RAS	RETURN ACTIVATED SLUDGE
RAW	RAW WATER
REM	REMOTE
RF	RADIO FREQUENCY
RIO	REMOTE INPUT OUTPUT
RS	RAW SEWAGE
RSP	RAW SEWAGE PUMP
RST	RESET
RTD	RESISTANCE TEMPERATURE DETECTOR
RTU	REMOTE TELEMETRY UNIT
RUNf	RUN (FAST SPEED)
RUNs	RUN (SLOW SPEED)
SB	SLUDGE BLANKET
SEQ	SERVICE ENTRANCE EQUIPMENT
SES	SERVICE ENTRANCE SECTION
SLC	SINGLE LOOP CONTROLLER
SLOS	START-LOCK-OFF-STOP
SO2	SULFUR DIOXIDE
SOV	SOLENOID OPERATED VALVE
SP	SET POINT
SPD	SPEED
SPR	SPARE
SS	START/STOP (MAINTAINED)
SSS	SOLID STATE STARTER (SOFT START)
STR	MOTOR STARTER
TAH	TEMPERATURE ALARM HIGH
T/M	TEMPERATURE AND/OR MOISTURE
TEMP	TEMPERATURE
TS	TEMPERATURE SWITCH
TSS	TOTAL SUSPENDED SOLIDS
UG	UNDERGROUND
USD	UP/STOP/DOWN
V	VOLT
VFD	VARIABLE FREQUENCY DRIVE
W	WATER
WAS	WASTE ACTIVATED SLUDGE
WW	WASTEWATER
XMTR	TRANSMITTER
ZS	POSITION (i.e. LIMIT) SWITCH

TAG NUMBERS AND DESIGNATIONS

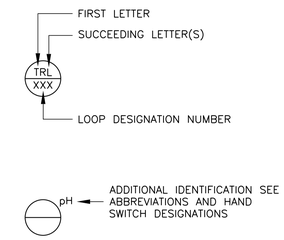

HAND SWITCH DESIGNATIONS

ES	EMERGENCY STOP
HOA	HAND-OFF-AUTO
HOR	HAND-OFF-REMOTE
HORA	HAND-OFF-REMOTE-AUTO
JOA	JOG-OFF-AUTO
LOR	LOCAL-OFF-REMOTE
LR	LOCAL-REMOTE
OC	OPEN-CLOSE
OO	ON-OFF
S/S	START STOP PUSH BUTTONS

LINE SYMBOLS

- MAJOR PROCESS PIPING OR FLOW CHANNEL
- EXISTING PROCESS PIPING
- SECONDARY PROCESS PIPING
- EXISTING SECONDARY PROCESS PIPING
- FUTURE PIPING AND EQUIPMENT
- ELECTRICAL SIGNAL
- HYDRAULIC SIGNAL
- PNEUMATIC SIGNAL
- ELECTRICAL DIRECTION ARROW
- SIGNAL CONNECTION POINT
- FLOW ARROW FOR PROCESS PIPING
- I-3 /A — PROCESS OR SIGNAL LINE GOING TO ANOTHER SHEET (MATCH LETTERS)
- I-2 /A — PROCESS OR SIGNAL LINE FROM ANOTHER SHEET (MATCH LETTERS)
- PROCESS LINES CROSSING (NOT CONNECTED)
- INTERNAL SYSTEM SIGNAL LINK (SOFTWARE OR DATA LINK)

P&ID VALVE SYMBOLS

- GATE OR GENERIC VALVE
- 3-WAY VALVE
- 4-WAY VALVE
- ANGLE VALVE
- BUTTERFLY VALVE
- PLUG VALVE
- ECCENTRIC PLUG VALVE
- BALL VALVE
- CHECK VALVE
- SWING CHECK VALVE
- STOP CHECK VALVE
- BALL CHECK VALVE
- PINCH VALVE
- DIAPHRAGM VALVE
- DIAPHRAGM VALVE (ALTERNATE)
- GLOBE VALVE
- HAND VALVE
- KNIFE VALVE
- M — MOTORIZED VALVE ACTUATOR
- S — SOLENOID VALVE 2-WAY
- S — SOLENOID VALVE 3-WAY
- S — PUMP CONTROL VALVE
- S S — FLOW CONTROL VALVE
- PRESSURE RELIEF VALVE
- VACUUM RELIEF VALVE
- PRESSURE REGULATOR WITH REMOTE PROCESS CONNECTION
- PRESSURE REGULATOR SELF CONTAINED
- AIR RELEASE VALVE

P&ID EQUIPMENT AND PROCESS SYMBOLS

- METERING PUMP WITH MANUAL STROKE CONTROL
- ROTARY LUBE PUMP
- M — SUBMERSIBLE MIXER
- M — AERATOR
- S — SUBMERSIBLE PUMP
- DIESEL GENERATOR
- CENTRIFUGAL PUMP
- BLOWER
- LIFT PUMP
- M — MOTOR OR MOTOR ACTUATOR
- PNEUMATIC ACTUATOR
- S — SOLENOID
- M — VERTICAL TURBINE PUMP
- CL_2 — CHLORINE TANK
- WEIGHT SCALE
- AIR COMPRESSOR
- SLUICE GATE
- SAMPLER
- PROPELLER FLOWMETER ELEMENT
- M — MAGNETIC FLOWMETER ELEMENT
- CL2 FLOWMETER
- MASS FIT 6 — INSERTION TYPE MASS FLOW METER
- MASS FIT 6 — MASS FLOW METER ANNUBAR TYPE
- DRAIN
- OUTLET SILENCER
- INLET SILENCER
- ROTAMETER
- AIR RELIEF VALVE
- EJECTOR
- DIAPHRAGM SEAL
- DIFFUSER
- DIAPHRAGM
- Y-TYPE STRAINER
- IPS CORPORATION STOP
- PVC DIFFUSER WITH IPS CORPORATION STOP

SENSING, INDICATION, AND CONTROL SYMBOLS

- LE — ULTRASONIC LEVEL TRANSDUCER
- LS — FLOAT SWITCH
- BEACON R — BEACON R=RED, A=AMBER, B=BLUE, G=GREEN
- STOP YL G — INDICATING LIGHT
- HOA HS — HAND SWITCH
- ORP AIT — ORP ANALYZER
- pH AIT — pH ANALYZER
- AE — ANALYZER ELEMENT
- DO AE — DO SENSOR
- ORP AE — ORP SENSOR
- pH AE — pH SENSOR
- DO AIT — DO ANALYZER
- CL2 AE — RESIDUAL CL2 CHLORINE SENSOR
- CL2 AIT — RESIDUAL CL2 CHLORINE ANALYZER

P&ID INTERFACE SYMBOLS

- AAA BBB X — PILOT LIGHT X= LENS COLOR, R=RED, G=GREEN, A=AMBER B=BLUE
- AAA BBB CCC — FIELD DEVICE
- AAA BBB CCC — PANEL DEVICE
- AAA BBB CCC — DEVICE MOUNTED IN SUBPANEL
- BBB CCC — REMOTE I/O TERMINAL
- BBB CCC — HMI OR OIT FUNCTION
- I X — INTERLOCK DEVICE OR RELAY X=NOTE REF.
- I/I — DUAL CHANNEL CURRENT ISOLATOR
- DISCRETE INPUT
- DISCRETE OUTPUT
- ANALOG INPUT
- ANALOG OUTPUT
- PULSE INPUT

NOTE:

REFER TO ISA INSTRUMENT IDENTIFICATION TABLE FOR DEFINITION OF LETTERS BBB INSIDE THE BUBBLES. CCC REPRESENTS LOOP ID (IF USED). SEE ABBREVIATIONS LIST FOR SUPERSCRIPT AAA.

DELTA SYSTEMS
202 E. EARLL DRIVE, SUITE 110
PHOENIX, AZ 85012 602.266.4658

I001

No.	REVISION	APPROVED	DATE

UNAUTHORIZED CHANGES AND USES: The engineer preparing these plans will not be responsible for, or liable for, unauthorized changes to or uses of these plans. All changes to these plans must be in writing and must be approved by the preparer of these plans.

DESIGNED BY: CW/DN	DRAWN BY: CW
SCALE:NTS	CHECKED BY: DN
BENCH MARK No.	ELEV.:

PREPARED UNDER THE DIRECT SUPERVISION OF:

BRIAN D. DOWNING — 17607 R.E.E. No.

09/15/2020 DATE — 6-30-21 REG. EXP.

REGISTERED PROFESSIONAL ENGINEER BRIAN DOWNING No. 17607 Exp. 06/30/21 ELECTRICAL STATE OF CALIFORNIA 09/15/20

The Holt Group, Inc.
ENGINEERING * SURVEYING * CONSTRUCTION MANAGEMENT * PLANNING
1601 N. IMPERIAL AVE. EL CENTRO CA 92243 PHONE: (760) 337-3883 FAX: (760) 337-5997
201 E. HOBSONWAY BLYTHE, CA 92225 PHONE: (760) 922-4658 FAX: (760) 922-4660

PROJECT TITLE : CITY OF HOLTVILLE - WATER TREATMENT PLANT IMPROVEMENTS - CONTROL SYSTEM IMPROVEMENTS

PROJECT NUMBER : 116.455

SHEET CONTENT : P&ID SYMBOLS AND LEGEND

SHEET NO. 40 OF 46 SHEETS

XREF: 1952_BDR

DWG FILE: X:\1900'S\1952.00 HOLTVILLE WTP CONTROLS SYSTEM UPGRADE RFP DEVELOPMENT\100 - E&I DESIGN_CAD FILES\1952.00.100_I001.DWG 3:35PM PLOTTED: Sep 15, 2020 johrens

NOTES:

1. PLANT INFLUENT FLOW SIGNAL IS TO BE RE-TRANSMITTED TO RAW WATER PUMP STATION FOR DISPLAY SO AS TO PROVIDE FEEDBACK TO AN OPERATOR AS THEY ADJUST PLANT INFLUENT FLOW VIA MANUALLY OPERATED VALVE.

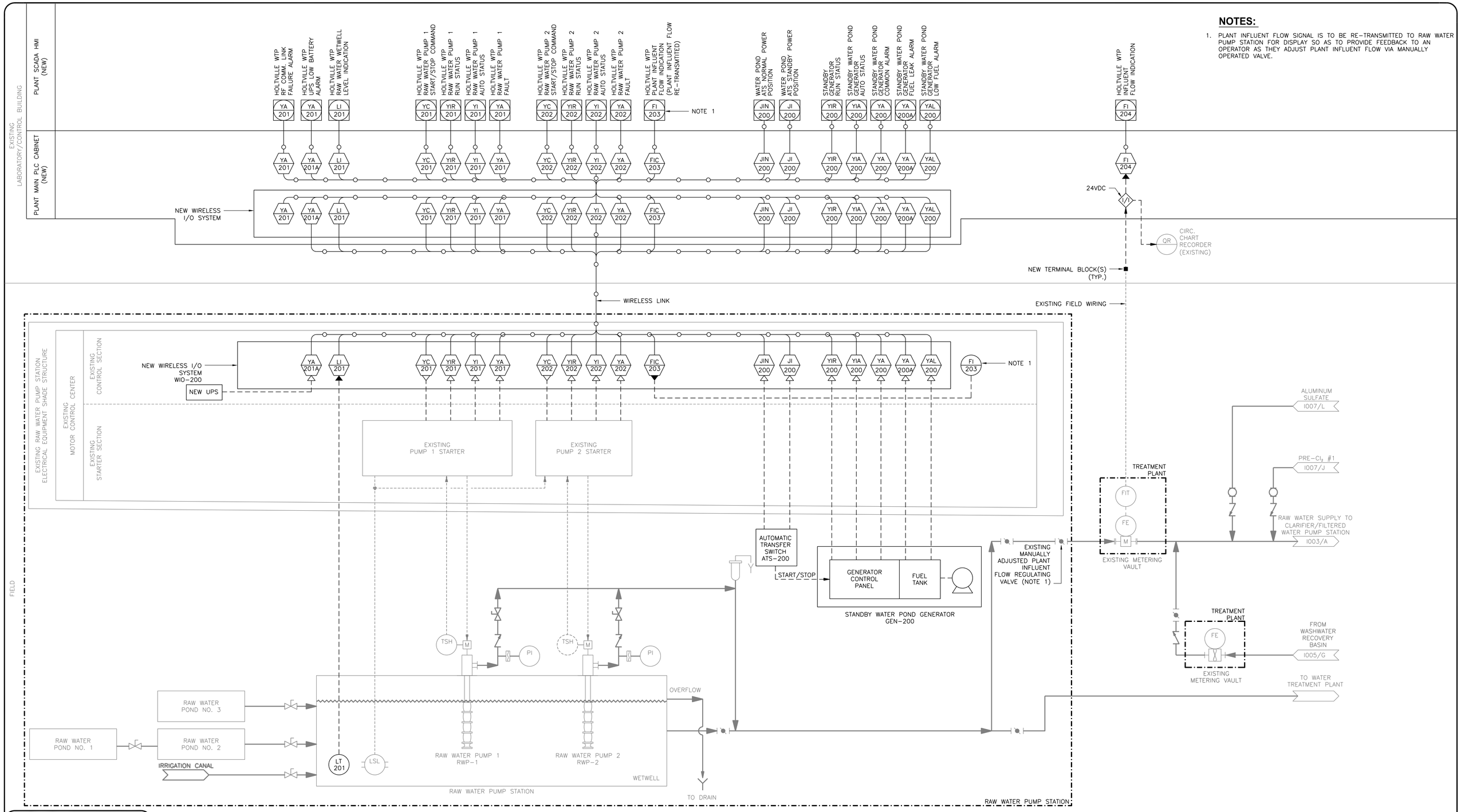

DELTA SYSTEMS
202 E. EARLL DRIVE, SUITE 110
PHOENIX, AZ 85012 602.266.4658

I002

No.	REVISION	APPROVED	DATE

UNAUTHORIZED CHANGES AND USES: The engineer preparing these plans will not be responsible for, or liable for, unauthorized changes to or uses of these plans. All changes to these plans must be in writing and must be approved by the preparer of these plans.

DESIGNED BY: CW/DN | DRAWN BY: CW
SCALE:NTS | CHECKED BY: DN
BENCH MARK No. | ELEV.:

PREPARED UNDER THE DIRECT SUPERVISION OF:

BRIAN D. DOWNING — 17607 R.E.E. No.
09/15/2020 DATE — 6-30-21 REG. EXP.

REGISTERED PROFESSIONAL ENGINEER BRIAN DOWNING No. 17607 Exp. 06/30/21 ELECTRICAL STATE OF CALIFORNIA 09/15/20

The Holt Group, Inc.
ENGINEERING * SURVEYING * CONSTRUCTION MANAGEMENT * PLANNING
1601 N. IMPERIAL AVE. EL CENTRO, CA 92243 PHONE: (760) 337-3883 FAX: (760) 337-5997
201 E. HOBSONWAY BLYTHE, CA 92225 PHONE: (760) 922-4658 FAX: (760) 922-4660

PROJECT TITLE : CITY OF HOLTVILLE - WATER TREATMENT PLANT IMPROVEMENTS - CONTROL SYSTEM IMPROVEMENTS

PROJECT NUMBER : 116.455

SHEET CONTENT : P&ID - SHEET 1

SHEET NO. 41 OF 46 SHEETS

XREF: 1952_BDR

DWG FILE: X:\1900'S\1952.00 HOLTVILLE WTP CONTROLS SYSTEM UPGRADE RFP DEVELOPMENT\100 - E&I DESIGN_CAD FILES\1952.00.100_I002.DWG 3:36PM PLOTTED: Sep 15, 2020 johrens

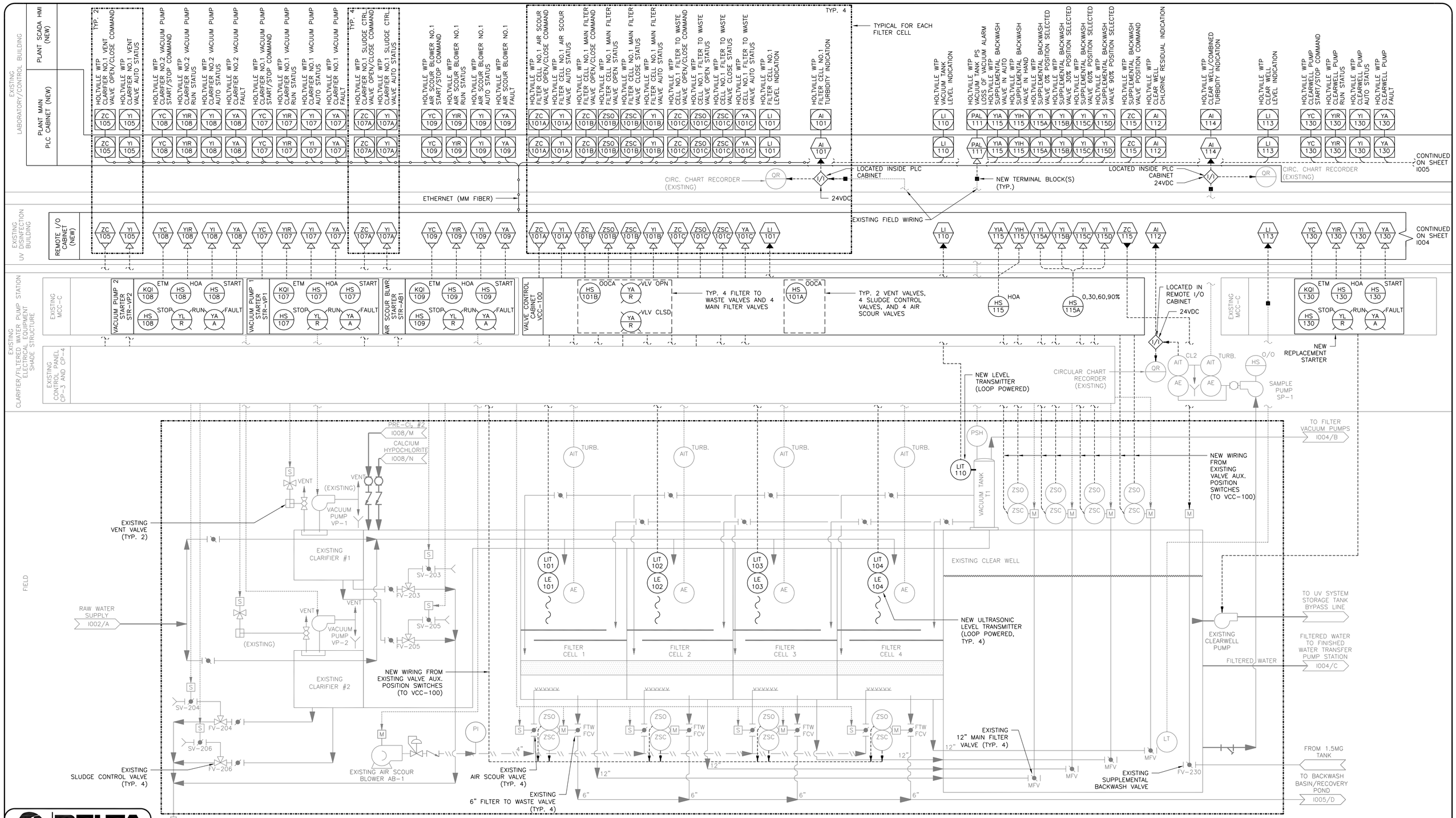

DELTA SYSTEMS
202 E. EARLL DRIVE, SUITE 110
PHOENIX, AZ 85012 602.266.4658

I003

No.	REVISION	APPROVED	DATE

UNAUTHORIZED CHANGES AND USES: The engineer preparing these plans will not be responsible for, or liable for, unauthorized changes to or uses of these plans. All changes to these plans must be in writing and must be approved by the preparer of these plans.

DESIGNED BY: CW/DN | DRAWN BY: CW
SCALE:NTS | CHECKED BY: DN
BENCH MARK No. | ELEV.:

PREPARED UNDER THE DIRECT SUPERVISION OF:
BRIAN D. DOWNING — 17607 R.E.E. No.
09/15/2020 DATE — 6-30-21 REG. EXP.

REGISTERED PROFESSIONAL ENGINEER BRIAN DOWNING No. 17607 Exp. 06/30/21 ELECTRICAL STATE OF CALIFORNIA 09/15/20

The Holt Group, Inc.
ENGINEERING * SURVEYING * CONSTRUCTION MANAGEMENT * PLANNING
1601 N. IMPERIAL AVE. EL CENTRO, CA 92243 PHONE: (760) 337-3883 FAX: (760) 337-5997
201 E. HOBSONWAY BLYTHE, CA 92225 PHONE: (760) 922-4658 FAX: (760) 922-4660

PROJECT TITLE : CITY OF HOLTVILLE - WATER TREATMENT PLANT IMPROVEMENTS - CONTROL SYSTEM IMPROVEMENTS
PROJECT NUMBER : 116.455
SHEET CONTENT : P&ID - SHEET 2

SHEET NO. 42 OF 46 SHEETS

XREF: 1952_BDR

DWG FILE: X:\1900'S\1952.00 HOLTVILLE WTP CONTROLS SYSTEM UPGRADE RFP DEVELOPMENT\100 - E&I DESIGN_CAD FILES\1952.00.100_I003.DWG 3:36PM PLOTTED: Sep 15, 2020 jahrens

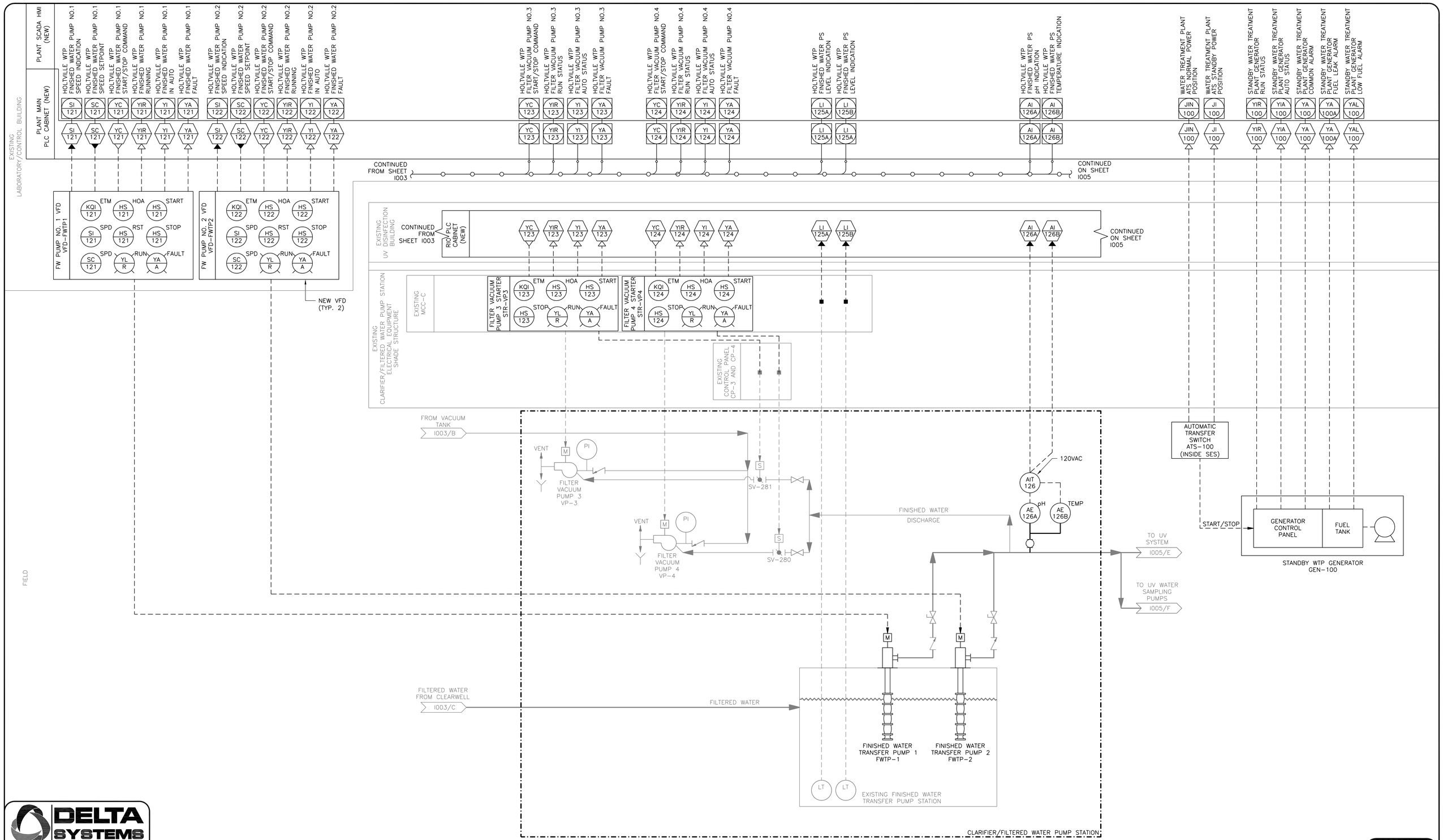

I004

DELTA SYSTEMS
202 E. EARLL DRIVE, SUITE 110
PHOENIX, AZ 85012 602.266.4658

No.	REVISION	APPROVED	DATE

UNAUTHORIZED CHANGES AND USES: The engineer preparing these plans will not be responsible for, or liable for, unauthorized changes to or uses of these plans. All changes to these plans must be in writing and must be approved by the preparer of these plans.

DESIGNED BY: CW/DN	DRAWN BY: CW
SCALE:NTS	CHECKED BY: DN
BENCH MARK No.	ELEV.:

PREPARED UNDER THE DIRECT SUPERVISION OF:

BRIAN D. DOWNING — 17607 R.E.E. No.

09/15/2020 DATE — 6-30-21 REG. EXP.

REGISTERED PROFESSIONAL ENGINEER BRIAN DOWNING No. 17607 Exp. 06/30/21 ELECTRICAL STATE OF CALIFORNIA 09/15/20

The Holt Group, Inc.
ENGINEERING * SURVEYING * CONSTRUCTION MANAGEMENT * PLANNING

1601 N. IMPERIAL AVE. EL CENTRO, CA 92243 PHONE: (760) 337-3883 FAX: (760) 337-5997
201 E. HOBSONWAY BLYTHE, CA 92225 PHONE: (760) 922-4658 FAX: (760) 922-4660

PROJECT TITLE : CITY OF HOLTVILLE - WATER TREATMENT PLANT IMPROVEMENTS - CONTROL SYSTEM IMPROVEMENTS

PROJECT NUMBER : 116.455

SHEET CONTENT : P&ID - SHEET 3

SHEET NO. 43 OF 46 SHEETS

XREF: 1952_BDR

DWG FILE: X:\1900'S\1952.00 HOLTVILLE WTP CONTROLS SYSTEM UPGRADE RFP DEVELOPMENT\100 - E&I DESIGN_CAD FILES\1952.00.100_I004.DWG 3:36PM PLOTTED: Sep 15, 2020 jahrens

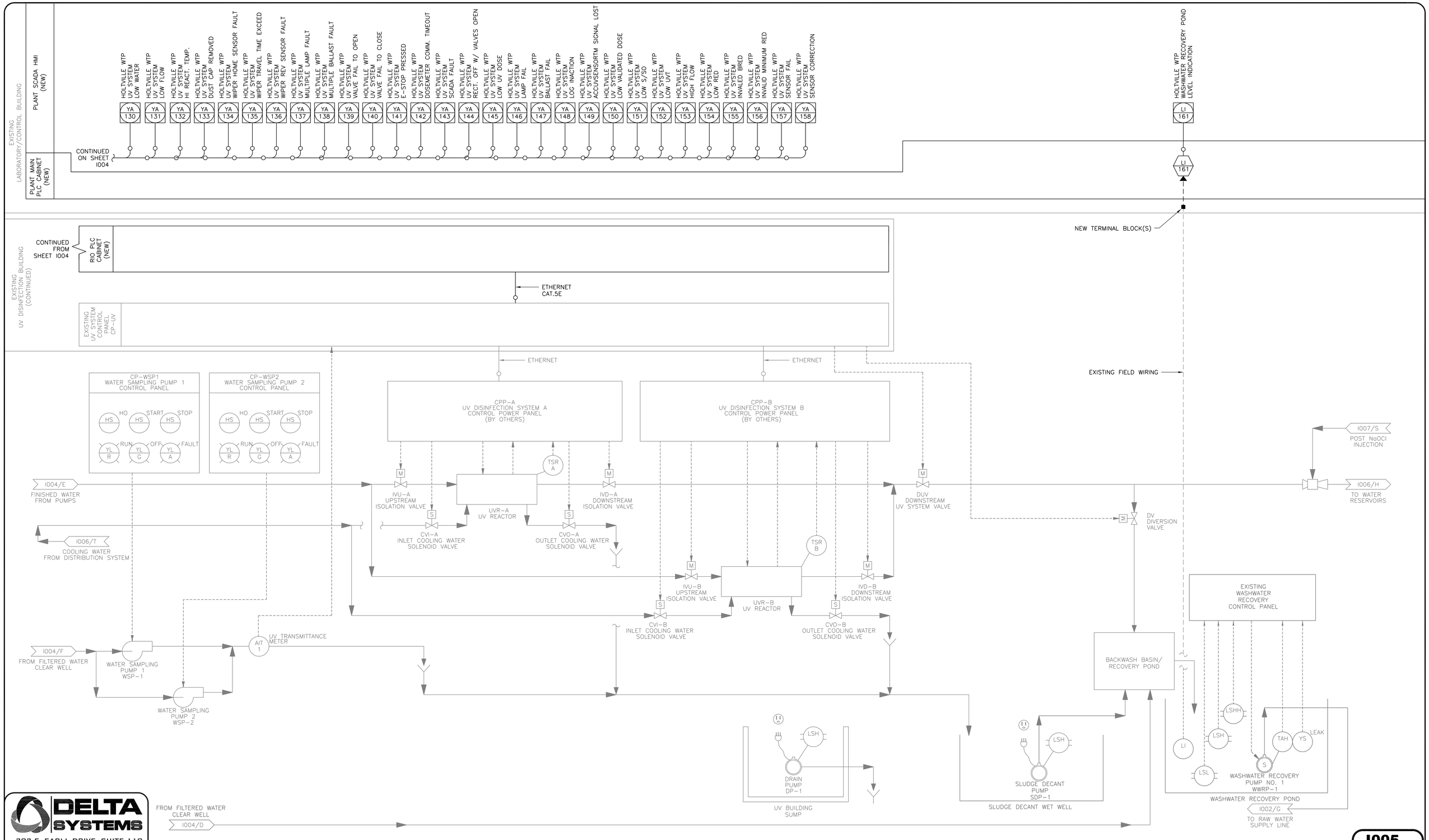

DELTA SYSTEMS
202 E. EARLL DRIVE, SUITE 110
PHOENIX, AZ 85012 602.266.4658

I005

No.	REVISION	APPROVED	DATE

UNAUTHORIZED CHANGES AND USES: The engineer preparing these plans will not be responsible for, or liable for, unauthorized changes to or uses of these plans. All changes to these plans must be in writing and must be approved by the preparer of these plans.

DESIGNED BY: CW/DN	DRAWN BY: CW
SCALE:NTS	CHECKED BY: DN
BENCH MARK No.	ELEV.:

PREPARED UNDER THE DIRECT SUPERVISION OF:

BRIAN D. DOWNING — 17607 R.E.E. No.

09/15/2020 DATE — 6-30-21 REG. EXP.

REGISTERED PROFESSIONAL ENGINEER BRIAN DOWNING No. 17607 Exp. 06/30/21 ELECTRICAL STATE OF CALIFORNIA 09/15/20

The Holt Group, Inc.
ENGINEERING * SURVEYING * CONSTRUCTION MANAGEMENT * PLANNING

1601 N. IMPERIAL AVE. EL CENTRO, CA 92243 PHONE: (760) 337-3883 FAX: (760) 337-5997
201 E. HOBSONWAY BLYTHE, CA 92225 PHONE: (760) 922-4658 FAX: (760) 922-4660

PROJECT TITLE : CITY OF HOLTVILLE - WATER TREATMENT PLANT IMPROVEMENTS - CONTROL SYSTEM IMPROVEMENTS

PROJECT NUMBER : 116.455

SHEET CONTENT : P&ID - SHEET 4

SHEET NO. 44 OF 46 SHEETS

XREF: 1952_BDR

DWG FILE: X:\1900'S\1952.00 HOLTVILLE WTP CONTROLS SYSTEM UPGRADE RFP DEVELOPMENT\100 - E&I DESIGN_CAD FILES\1952.00.100_I005.DWG 3:36PM PLOTTED: Sep 15, 2020 johrens

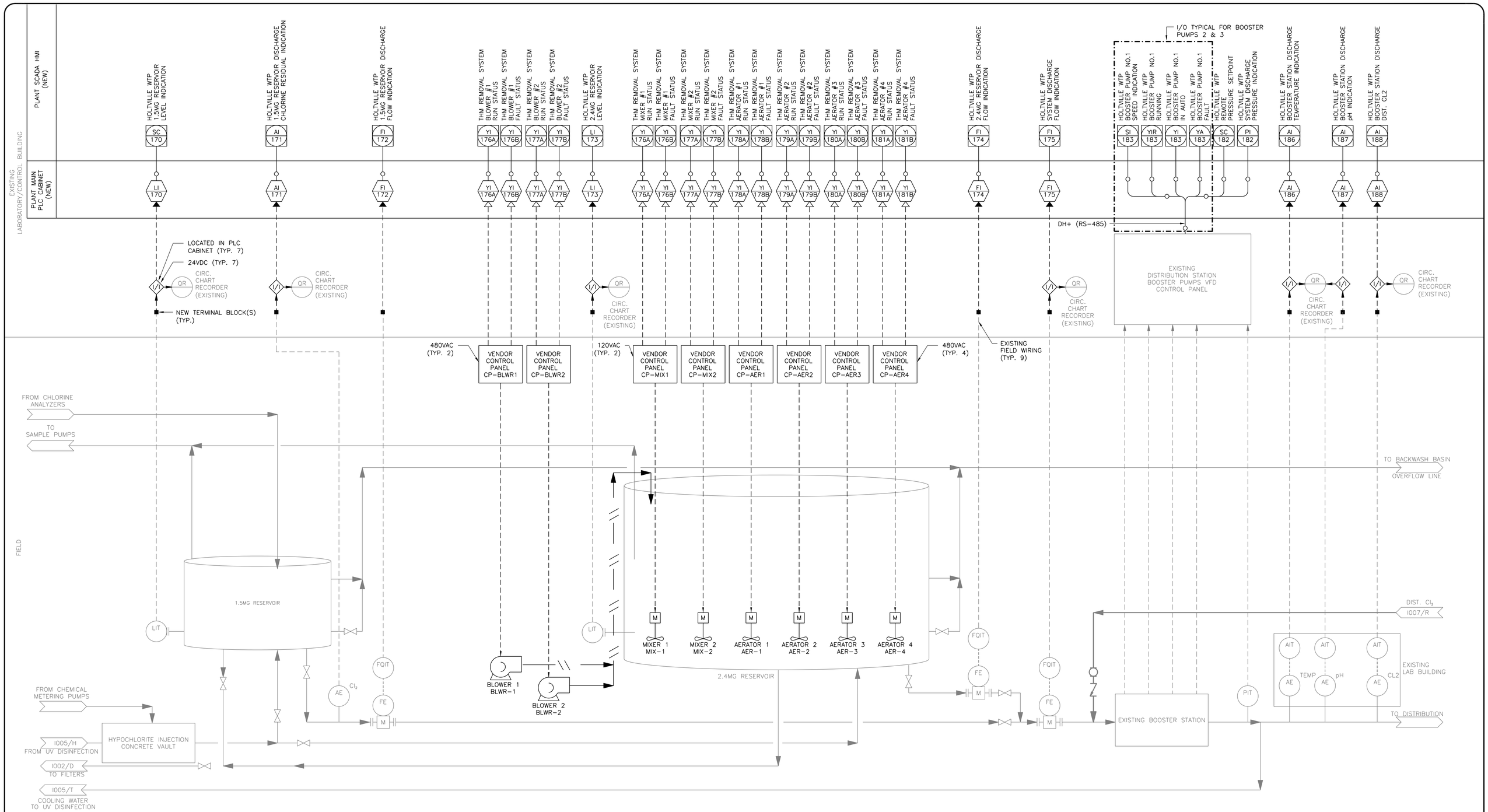

DELTA SYSTEMS
202 E. EARLL DRIVE, SUITE 110
PHOENIX, AZ 85012 602.266.4658

I006

No.	REVISION	APPROVED	DATE

UNAUTHORIZED CHANGES AND USES: The engineer preparing these plans will not be responsible for, or liable for, unauthorized changes to or uses of these plans. All changes to these plans must be in writing and must be approved by the preparer of these plans.

XREF: 1952_BDR

DESIGNED BY: CW/DN	DRAWN BY: CW
SCALE:NTS	CHECKED BY: DN
BENCH MARK No.	ELEV.:

PREPARED UNDER THE DIRECT SUPERVISION OF:

BRIAN D. DOWNING — 17607 R.E.E. No.

09/15/2020 DATE — 6-30-21 REG. EXP.

REGISTERED PROFESSIONAL ENGINEER BRIAN DOWNING No. 17607 Exp. 06/30/21 ELECTRICAL STATE OF CALIFORNIA 09/15/20

The Holt Group, Inc.
ENGINEERING * SURVEYING * CONSTRUCTION MANAGEMENT * PLANNING
1601 N. IMPERIAL AVE. EL CENTRO CA 92243 PHONE: (760) 337-3883 FAX: (760) 337-5997
201 E. HOBSONWAY BLYTHE, CA 92225 PHONE: (760) 922-4658 FAX: (760) 922-4660

PROJECT TITLE : CITY OF HOLTVILLE - WATER TREATMENT PLANT IMPROVEMENTS - CONTROL SYSTEM IMPROVEMENTS

PROJECT NUMBER : 116.455

SHEET CONTENT : P&ID - SHEET 5

SHEET NO. 45 OF 46 SHEETS

DWG FILE: X:\1900'S\1952.00 HOLTVILLE WTP CONTROLS SYSTEM UPGRADE RFP DEVELOPMENT\100 - E&I DESIGN_CAD FILES\1952.00.100_I006.DWG 3:36PM PLOTTED: Sep 15, 2020 johrens

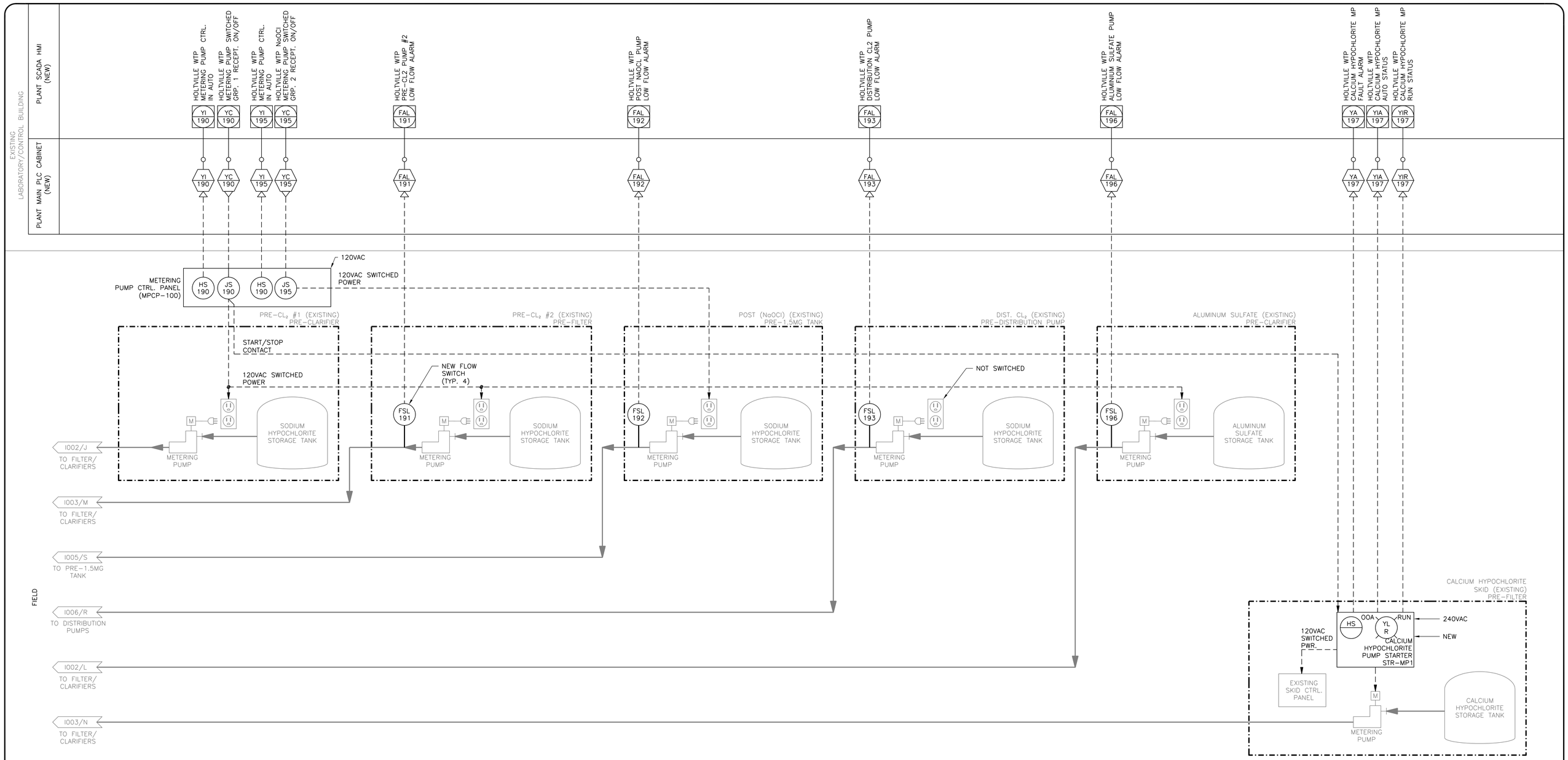

DELTA SYSTEMS
202 E. EARLL DRIVE, SUITE 110
PHOENIX, AZ 85012 602.266.4658

I007

No.	REVISION	APPROVED	DATE

UNAUTHORIZED CHANGES AND USES: The engineer preparing these plans will not be responsible for, or liable for, unauthorized changes to or uses of these plans. All changes to these plans must be in writing and must be approved by the preparer of these plans.

DESIGNED BY: CW/DN	DRAWN BY: CW
SCALE:NTS	CHECKED BY: DN
BENCH MARK No.	ELEV.:

PREPARED UNDER THE DIRECT SUPERVISION OF:

BRIAN D. DOWNING — 17607 R.E.E. No.

09/15/2020 DATE — 6-30-21 REG. EXP.

REGISTERED PROFESSIONAL ENGINEER BRIAN DOWNING No. 17607 Exp. 06/30/21 ELECTRICAL STATE OF CALIFORNIA 09/15/20

The Holt Group, Inc.
ENGINEERING * SURVEYING * CONSTRUCTION MANAGEMENT * PLANNING

1601 N. IMPERIAL AVE. EL CENTRO, CA 92243 PHONE: (760) 337-3883 FAX: (760) 337-5997
201 E. HOBSONWAY BLYTHE, CA 92225 PHONE: (760) 922-4658 FAX: (760) 922-4660

PROJECT TITLE : CITY OF HOLTVILLE - WATER TREATMENT PLANT IMPROVEMENTS - CONTROL SYSTEM IMPROVEMENTS

PROJECT NUMBER : 116.455

SHEET CONTENT : P&ID - SHEET 6

SHEET NO. 46 OF 46 SHEETS

XREF: 1952_BDR

DWG FILE: X:\1900'S\1952.00 HOLTVILLE WTP CONTROLS SYSTEM UPGRADE RFP DEVELOPMENT\100 - E&I DESIGN_CAD FILES\1952.00.100_I007.DWG 3:36PM PLOTTED: Sep 15, 2020 jahrens